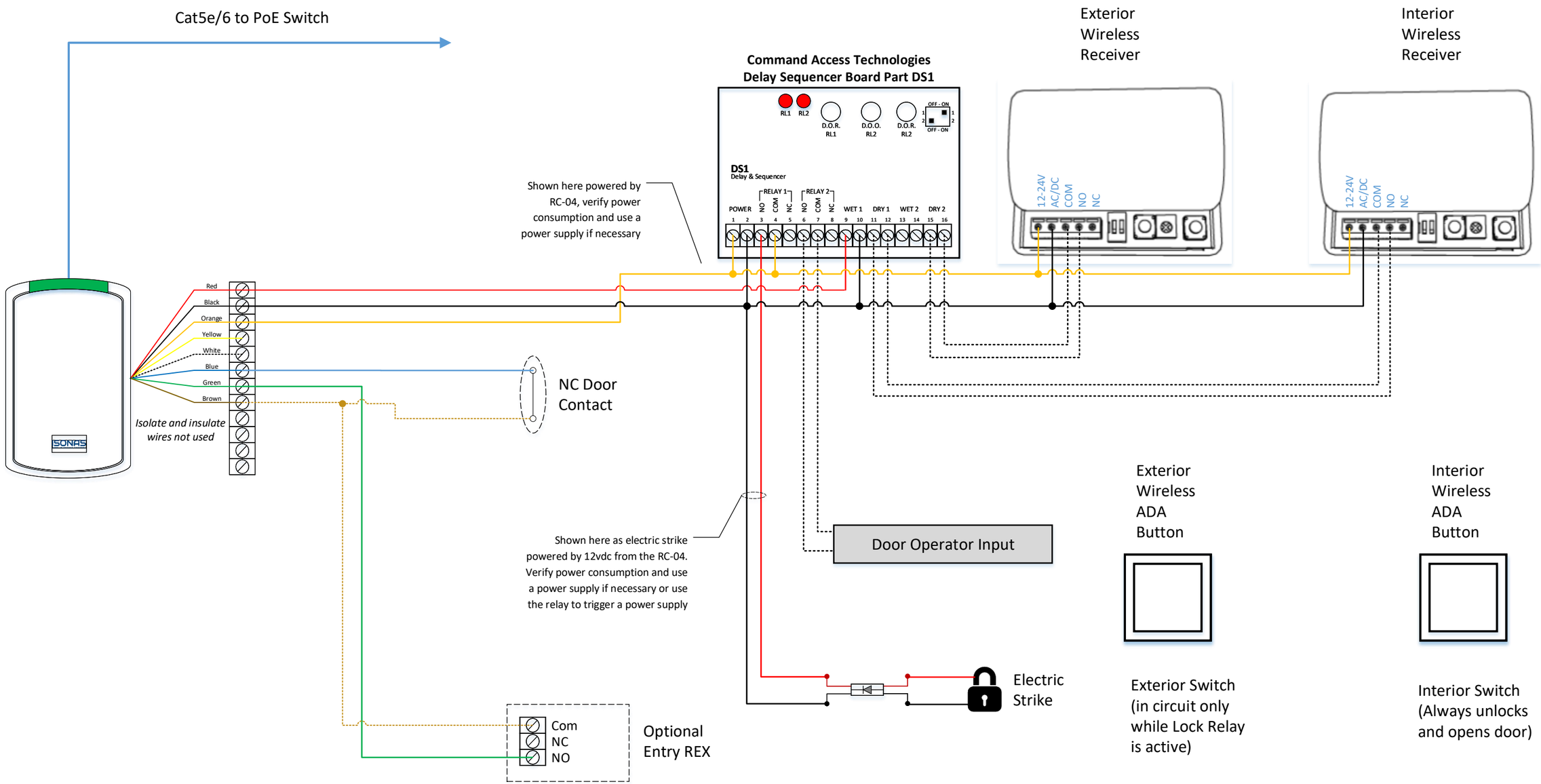

Important – Read This First

- Always refer to manufacturer instructions, this drawing is a recommendation and site characteristics vary.
- When utilizing 12vdc from a PoE powered RC-04 verify power calculation to ensure enough power is available for all devices.
- Some adjustment of the timing will be necessary by adjusting the potentiometers, installing the device at default values will result in errors.

RC-04.POE.Strike.REX.DSM.ADA-CADS1.WirelessButtons

Dwg No:	Sheet 1	of 1
Date: 11-22-2017	Drawn By: David Tamarchenko	Version: 1.00.00

ISONAS PURE IP ACCESS CONTROL

4750 Walnut Street Suite 110
Boulder, CO 80301
www.isonas.com