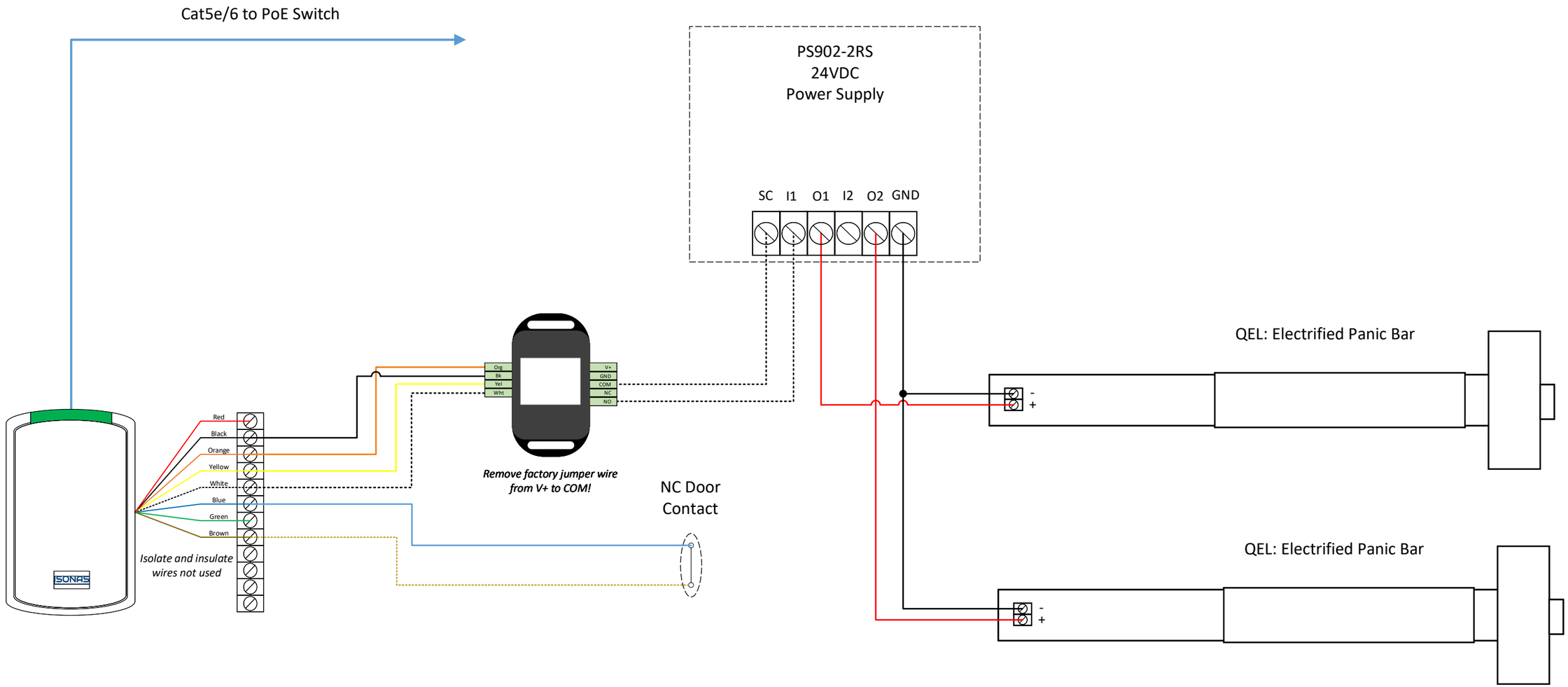

Important – Read This First

- Always refer to manufacturer instructions, this drawing is a recommendation and site characteristics vary.
- Some adjustment of the timing will be necessary by adjusting the potentiometers, installing the device at default values will result in errors.
- Read and follow instructions for separate power supply that is specific to the electrified panic bar
- All cables to the latch retraction bar must be routed through some sort of hinge transfer: armored cable, morticed pivot transfer, or electrified hinge transfer.

RC-04.POE.PS902.EDK.2xQEL.DSM

Dwg No:	Sheet 1	of 1
Date: 9-25-18	Drawn By: David Tamarchenko	Version: 1.00.00

ISONAS™ PURE IP ACCESS CONTROL

4750 Walnut Street Suite 110
Boulder, CO 80301
www.isonas.com