www.schlage.com

Codeguard
Series III Scrambling Keypad

TECHNICAL MANUAL

Wiegand Appendix

Issue 1 OCTOBER 1989

Rev. 2012-4.8.5+
September 2012

CODEGUARD SECURITY LTD

3 Saxon Way
Melbourn
South Cambridgeshire
SG8 6DN
UK
t +44 (0) 1763 849 762
e: mail@codeguardsecurity.com
w: www.codeguardsecurity.com

IP65

Index of pages

Patent Information

All patents refer to a Digital Keypad where the pattern of digits 0-9 is scrambled by a pseudo-random number device upon depression of a Start key.
There are 10 factorial (3,628,800) possible permutations of the scrambled pattern.
The display is visible only to the operator; it is concealed from observation by persons close to the operator and from surveillance cameras or other line-of-sight devices.

Foreward

There are three versions of the CODEGUARD SERIES 11 and three versions of the SERIES III and together they cover all the interfacing permutations available. To simplify interfacing to existing installations the MODE designations remain the same as for the CODEGUARD SERIES I.

The four versions and their corresponding modes are listed below:

SERII MATRIX	Modes 1-4
SERII ENCODED	Modes 0 or "F"
SERII RS422	Modes *5-9 &* "A" to "D"
SERIII RS232	Modes *5-9* & "A" to "D"
SERIII WIEGAND	Modes 0-6 *(Legacy product)*
SERIII WIEGAND 8	Modes 0-8 *(Legacy product)*
SERIII WIEGAND 8+	Modes 0-A

Current product SERIII WIEGAND 8+ is backwards compatible with all legacy WIEGAND models.

The Mode is set by turning the rotary code switch using a small screwdriver. The switch is the LOWER of the three rotary switches located behind a rubber blanking plug in the rear panel.

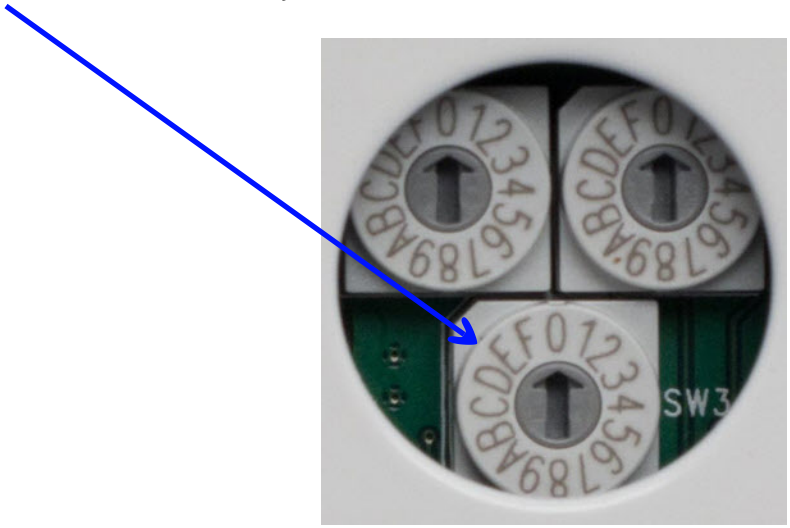

Figure 1

Important: Replace the rubber blanking plug before installation

Electrical connections to the installation are made to a screw terminal connector which plugs into the rear of the CODEGUARD. Full details of the signals and pin numbering can be found on page 13 of this manual.

SECTION 1 - OPERATION

Operating the Keypad

Figure 2

To operate the Keypad the user:

Presses the " * " key to turn on the display.

Enters the access-code etc.

Presses the "#" key to turn off the display.

Pressing the " * " key during entry (i.e. before the "#" key is pressed) will rescramble the digits.

If no key is pressed within a period of 8 seconds, the displays are automatically turned off.

The Yellow and Red User LED's on the Keypad are not driven by the Keypad, but may be driven by the Host system.

Operation

Press the " * " key to turn on the display, then enter the required code (the number of digits allowed depends on the mode selected). For modes in which the Code length is variable, press the "#" key to turn off the display and transmit the code, (this is done automatically if the maximum number of digits are entered).

Each keystroke causes a beep from the buzzer and a LED at the top of the keyboard to flash to confirm to the user that the entry has been received by the CODEGUARD.

The entered code digits are accumulated and then converted to a binary number before transmission.

The block of data transmitted includes a site code set on rotary code switches within the CODEGUARD. This number is set at installation.

SITE CODE:

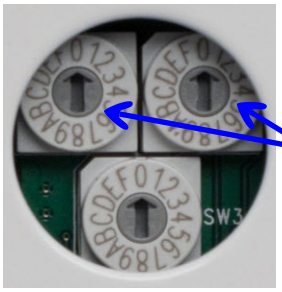

The site code is set in hexadecimal format by the upper two switches located on the rear panel.
i.e. 00 hex = 000 & FF hex = 256

Figure 3

Important: Replace the rubber blanking plug before installation of the Keypad.

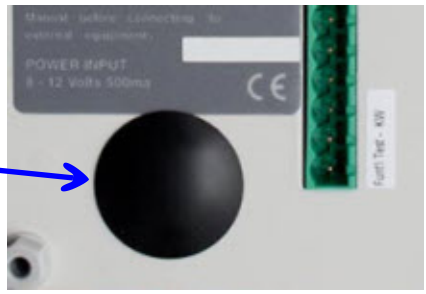

Figure 4

WIEGAND DATA FORMAT LIMITATIONS:

The following information may be helpful when assigning access codes as the number of data bits in the Wiegand format limits the numbers that can be used.

40-bits; 30-bits data & 8-bits site code. 1-9 digits all combinations & 256 site codes

34-bits; 16-bits data and 16-bits site code. 1-4 digits all combinations & 256 site codes

34-bits; 16-bits data and 16-bits site code. 5 digits 00000 → 65635 & 256 site codes

26-bits; 16-bits data and 8-bits site code. 4 digits all combinations & 256 site codes

26-bits; 16-bits data and 8-bits site code. 5 digits 00000 → 65635 & 256 site codes

Operating Modes

MODE 0

Code length: 1 to 9 digits.
The transmitted block length is 40 bits.

E	LSB	30 bit	MSB	LSB	8 bit	MSB	1 START
		DATA			SITE CODE		

BIT 1 is a start bit and is always a "1".
The last bit (bit 40) is an EVEN parity bit for the 30 data bits.

MODE 1

Code length: 1 to 4 digits. (Also see Mode 4.)
The transmitted block length is 34 bits.

O	LSB	16 bit	MSB	LSB	16 bit	MSB	E	START
		DATA			SITE CODE			

BIT 1 is an EVEN parity bit for the site code.
BIT 34 is an ODD parity bit for the 16 data bits.
To achieve a 16 bit site code, the 8 bit switch code is sent twice.

MODE 2

Code length: 1 to 4 digits. (Also see Mode 5.)
The transmitted block length is 26 bits.

O	LSB	16 bit	MSB	LSB	8 bit	MSB	E	START
		DATA			SITE CODE			

BIT 1 is an EVEN parity bit for the site code.
BIT 26 is an ODD parity bit for the 16 data bits.

MODE 3

Code length: 1 to 4 digits. (Also see Mode 5).
The transmitted block length is 26 bits.

O	LSB	16 bit	MSB	LSB	8 bit	MSB	E	START
		DATA			SITE CODE			

BIT 1 is an EVEN parity bit for the FIRST 12 bits.
BIT 26 is an ODD parity bit for the LAST 12 bits.

MODE 4

Code length: 5 digits. Otherwise the format is identical to Mode 1.
The transmitted block length is 34 bits.

O	LSB	16 bit	MSB	LSB	16 bit	MSB	E	START
		DATA			SITE CODE			

BIT 1 is an EVEN parity bit for the site code.
BIT 34 is an ODD parity bit for the 16 data bits.
To achieve a 16 bit site code, the 8 bit switch code is sent twice.

MODE 5

Code length: 5 digits. Otherwise the format is identical to Mode 2.
The transmitted block length is 26 bits.

O	LSB	16 bit	MSB	LSB	8 bit	MSB	E	START
		DATA			SITE CODE			

BIT 1 is an EVEN parity bit for the site code.
BIT 26 is an ODD parity bit for the 16 data bits.

MODE 6

Code length: 5 digits. Otherwise the format is identical to Mode 3.
The transmitted block length is 26 bits.

O	LSB	16 bit	MSB	LSB	8 bit	MSB	E	START
		DATA			SITE CODE			

BIT 1 is an EVEN parity bit for the FIRST 12 bits.
BIT 26 is an ODD parity bit for the LAST 12 bits.

MODE 7 (SERIII-W8 Firmware FF5 & FF7)

Emulates 4 bit burst. Each key press outputs data as a 4 bit word, as in the following table:

Keypad Entry	Binary data
0	0000
1	0001
2	0010
3	0011
4	0100
5	0101
6	0110
7	0111
8	1000
9	1001

Table 1

MODE 8 (SERIII-W8 Firmware FF5 & FF7)

Keypad emulates 8 bit burst. Each key press outputs data as an 8 bit word, as in the following table:

Keypad Entry	Binary data
0	11110000
1	11100001
2	11010010
3	11000011
4	10110100
5	10100101
6	10010110
7	10000111
8	01111000
9	01101001

Table 2

MODE 9 (SERIII-W8+ Firmware FF7)

Emulates 4 bit burst. All digits and symbols.
Each key press outputs data as a 4 bit word, as in the following table:

Keypad Entry	Binary data
0	0000 (Firmware FF5 & FF7)
1	0001 (Firmware FF5 & FF7)
2	0010 (Firmware FF5 & FF7)
3	0011 (Firmware FF5 & FF7)
4	0100 (Firmware FF5 & FF7)
5	0101 (Firmware FF5 & FF7)
6	0110 (Firmware FF5 & FF7)
7	0111 (Firmware FF5 & FF7)
8	1000 (Firmware FF5 & FF7)
9	1001 (Firmware FF5 & FF7)
#	1010 (Firmware FF7 only)
*	1011 (Firmware FF7 only)

Table 3

Note when "*" is pressed to wake up the Keypad no output is transmitted.

MODE A (SERIII-W8+ Firmware FF7)

Emulates 8 bit burst. All digits and symbols.
Each key press outputs data as an 8 bit word, as in the following table:

Keypad Entry	Binary data
0	11110000 (Firmware FF5 & FF7)
1	11100001 (Firmware FF5 & FF7)
2	11010010 (Firmware FF5 & FF7)
3	11000011 (Firmware FF5 & FF7)
4	10110100 (Firmware FF5 & FF7)
5	10100101 (Firmware FF5 & FF7)
6	10010110 (Firmware FF5 & FF7)
7	10000111 (Firmware FF5 & FF7)
8	01111000 (Firmware FF5 & FF7)
9	01101001 (Firmware FF5 & FF7)
#	01011010 (Firmware FF7 only)
*	01001011 (Firmware FF7 only)

Table 4

Note when "*" is pressed to wake up the Keypad no output is transmitted.

Setting the mode

The format of the transmitted code is determined by the setting of the Mode Switch.

This is the lower rotary switch (*Figure 5*), located behind the rubber grommet (*Figure 6*), in the rear cover of the unit.

Lower rotary switch

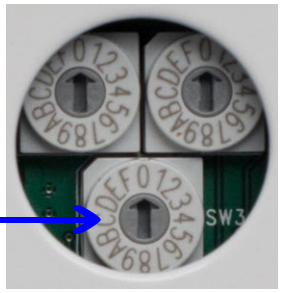

Figure 5

Figure 6

Select the required mode by rotating the switch until the arrow on the actuator points to the correct number.

Disconnect power from the unit when altering the setting of this switch.

Setting the site code

The site code is set using the upper two rotary switches (*Figure 7*), located behind the rubber grommet in the rear cover of the unit.

Upper rotary switches

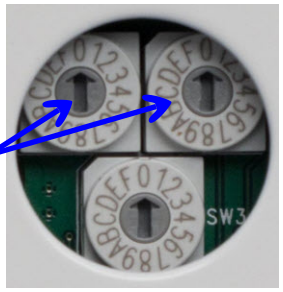

Figure 7

Select the required site code by rotating the switches until the arrow on the actuator points to the correct number.

Each switch is numbered 0 to F, allowing 256 different site codes to be selected (from 00 to FF).

The switch on the left sets the most-significant digit (MSD) of the site code, the switch on the right sets the least-significant digit (LSD) of the code.

Disconnect power from the unit when altering the setting of these switches.

Driving the User LED's

Driving the YELLOW input (Pin4) to a logic LO (Ground) will light the yellow LED.

Driving the Red INPUT (Pin 8) to a logic LO (Ground) will light the red LED.

If not required these inputs may be left open circuit.

Rear panel layout

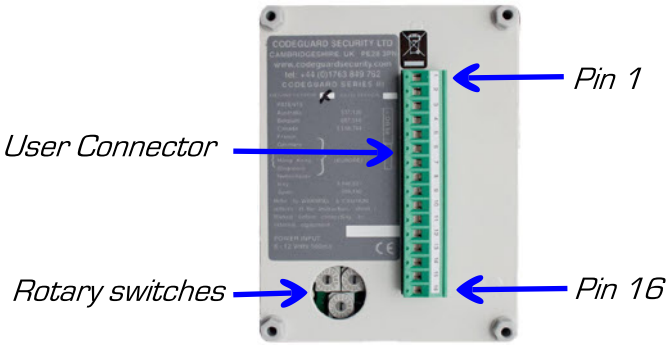

Figure 8

SECTION 2 - KEYPAD INTERFACING

Connecting the Keypad to a Host system

The Keypad connects to the Host system through the USER CONNECTOR lines.

Prior to installation the Keypad operating mode is selected using the internal rotary code switch. Access to this switch is obtained by removing the rubber blanking grommet from the rear panel.

Disconnect power from the Keypad before altering this switch.

Driving the Buzzer

If the BUZZER input (Pin 6) is driven to a logic LO (Ground) then the buzzer will sound. Internal operation at key presses cannot be disabled, the internal and external functions share the buzzer in a logical OR.

CAUTION

The buzzer is not intended for long continuous operation. Such operation may shorten the life of the part.

Pulse output specifications

The output pulses on the data transmission lines DO and DI are of approximately 100 microseconds duration at a repetition rate of approximately 5 milliseconds.

USER CONNECTOR PIN DESCRIPTIONS (WIEGAND VERSION 8.3+)

Pin	Name	Description
1	+5 V in	Power input for interface
2	GND	
3	POWER IN	+8V to +12V DC Unreg
4	YELLOW LED	User LED low = ON
5	D1	Data output
6	Buzzer	low = ON
7	D0	Data output
8	RED LED	User LED low = ON
9		
10	+5V out	Power for interface to Pin 1
11		
12		
13		
14		
15	Tamper Link	To Pin 16
16	Tamper Link	To Pin 15

Table 5

IMPORTANT NOTE

Pins 9 - 16: These functions <u>are not</u> available on Keypads with 2x orange 8 way User Connectors.

Link PIN 1 to PIN 10 on the interface connector if the host controller requires active High outputs from the Keypad. This is not required when the host provides a pull-up output, this would normally be connected to PIN 1 of the Keypad interface connector.

DO NOT USE THE OUTPUT FROM PIN 10 FOR ANY OTHER FUNCTION THAN PIN 1 PULL-UP OR TAMPER SIGNAL WHEN LOOPED THROUGH PIN 15 - 16.

Interface electronics

Data outputs (D0 and D1) are open-collector transistor outputs with 1k Ohm pull-up resistors connected to Interface Pin 1. An external +5 volts can be supplied from Pin 10 of the user interface connector to Pin 1, if this is not provided from the host system.

Buzzer and LED drive inputs are TTL level inputs with 1k Ohm pull-up resistors connected to Interface Pin 1.

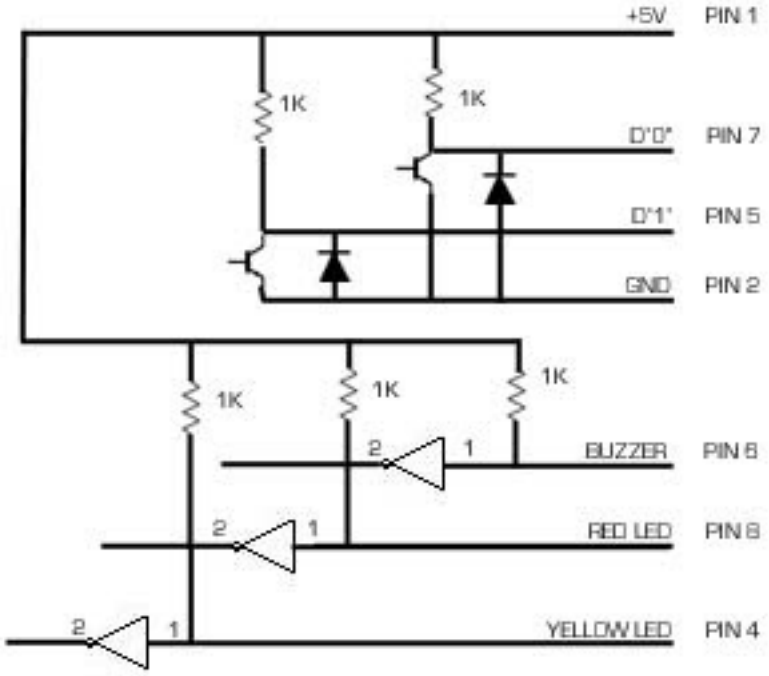

Figure 9

SECTION 3 - KEYPAD SELF-TEST

When power is first applied to the Keypad it performs a self-test and displays its firmware version number and operating mode.

The display format is:

Top row:	firmware version number
Second row:	blank
Third row:	232 - if SERIAL RS232 version 422 - if SERIAL RS422 version Blank - if MATRIX, ENCODED OR Wiegand versions Err - if the mode switch is incorrectly set.
Bottom row:	mode switch setting

If "Err" is displayed in the third row of the display this indicates that the setting of the mode switch is not compatible with this version of the CODEGUARD. Check these settings against the table for the appropriate mode version.

If the display is filled with "F"s on power-up this indicates that the instrument has failed its self-test.

SECTION 4 - ELECTRICAL SPECIFICATIONS

Electrical specifications

CHARACTERISTIC	SPECIFICATION
Operating Temperature Range	-15 to +50 degrees C (5 to 122 degrees F)
Input Voltage	+8V to +13.5V DC unregulated
Input Current	
Display off	35mA (TYP) 40mA (MAX)
Display on	180mA (TYP) 230mA (MAX)
User LED current	20mA per LED (MAX)
Other versions	
INPUT 0-3 (MATRIX, ENCODED modes)	LSTTL input
INPUT 0 - 3 (RS232 mode)	
Maximum input voltage	+/- 30V
INPUT 0 - 3 (RS422 mode)	
Maximum input voltage	+/- 7V (differential)
OUTPUT 0 - 3 (MATRIX, ENCODED modes)	LTTL output
OUTPUT 0 - 3 (RS232 mode)	
Minimum output voltage	+/- 5V
Maximum output voltage	+/- 10V
OUTPUT 0 - 3 (RS422 mode)	
Minimum output voltage	+/- 2V (differential)
Maximum output voltage	+5V
External Buzzer, RED, YELLOW, Output Enable, Remote Disable	LSTTL input
Data Available	LSTTL output

IP65	BS EN 60529:1992 Para 13.4 IP6X
FCC Class A PT 15	BS EN 60529:1992 Para 14.2.5 IPX5
CE	

<u>Note on power-dissipation</u>:

Suitable for use in unventilated enclosures where the ambient temperature does not exceed +50 degrees C (122 degrees F).

Operating the Keypad from input voltages greater than +12V will increase its power-dissipation. For maximum reliability the Keypad should be operated as near as possible to +12V.

SECTION 5 - INSTALLATION INFORMATION

(1) CODEGUARD can be flush mounted in a panel of up to 45mm (1.77ins) thickness (60mm (2.36ins) with rear access) in one of two ways:

1: Utilizing the steel housing enclosure using accessory **SPMK-2S** or Panel mounted utilizing **PMK-2**

2: Surface mounted in accessory **SMK-2**.

Full details of the various types of installation are given later in this manual.

(2) Installation at eye level with CODEGUARD mounted parallel to the vertical plane of a wall, door or panel, results in the eye level range of height being restricted to 160mm (6.3ins) at a distance of 450mm (17.7ins) from the keyboard.

This corresponds to an angular accommodation of +/- 10 degrees, which is necessary to prevent "over-the-head" viewing of the display.

The head of the viewer exceeds the space within the boundaries of display visibility.

(3) If the CODEGUARD is mounted at a low level of 1150mm (45ins) and tilted backwards at an angle of 30 degrees, the vertical viewing accommodation is greatly increased.

As an example, short people with an eye level at 1270mm (50ins) can move close to the keyboard and tall people with an eye level of 1720mm (67.7ins) can stand further back at a distance of approximately 450mm (17.7ins).

The vertical accommodation range increases from 160mm (6.2ins) to 450mm (17.7ins).

The body of the viewer exceeds the space within the boundaries of display visibility.

CODEGUARD RECESSED ON 30 DEGREE SLOPING PANEL

FLUSH PANEL MOUNTING

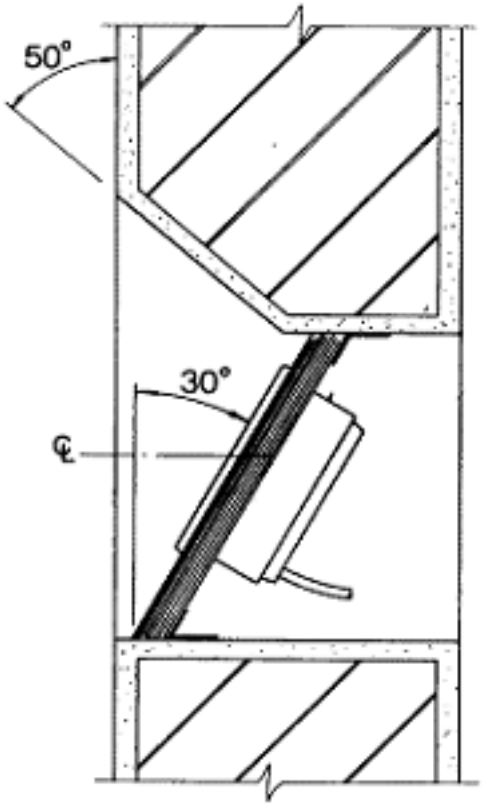

SURFACE MOUNTING ACCESSORY

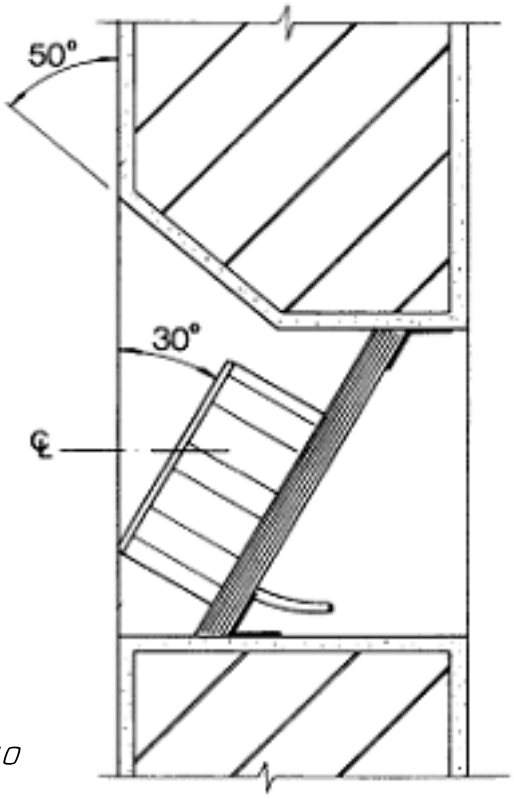

Figure 10

Either of these angled configurations provides a typical (eye level) viewing accommodation of 450mm (17.7ins).

If the C/L is at 1150mm (45ins) the eye level range is: -1270mm (50ins) to 1720mm (67.7ins).

In order to maintain IP65 rating it is essential that the Keypad is mounted in the correct enclosure and sealed with a suitable silicone sealant such as Dow Corning® 738.

Flush mounting of CODEGUARD in a panel using accessory PMK-2

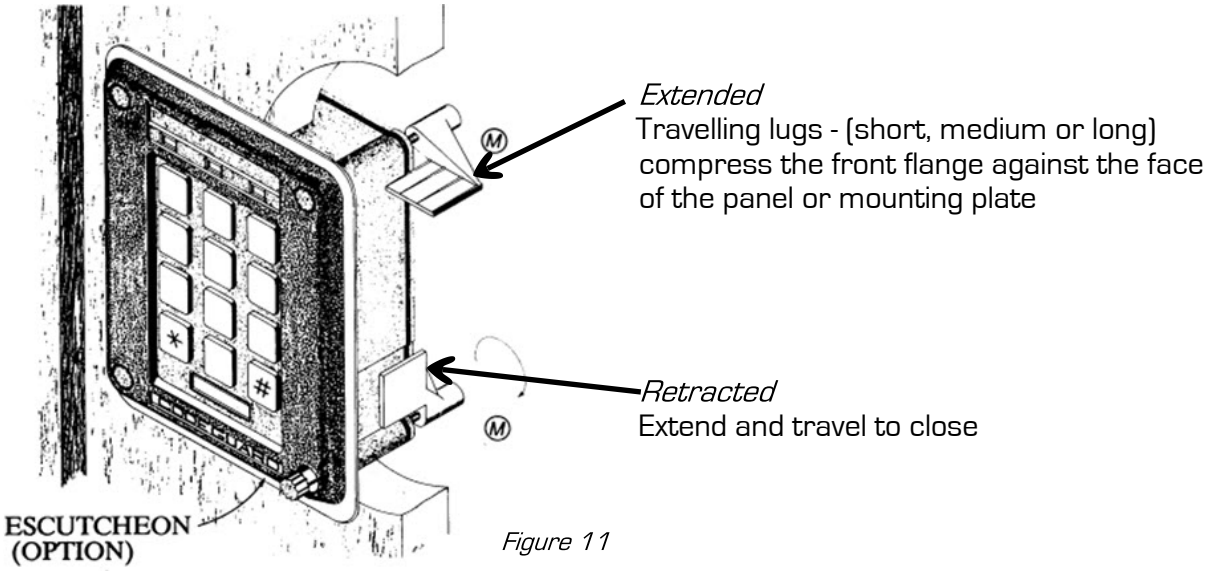

Figure 11

(1) Cut out an accurate aperture for the CODEGUARD using a template; the optional escutcheon plate is suitable. This plate is designed to hide roughly cut edges and is available in a "Grained Stainless Steel" finish (Part no. ESC-GRN).

(2) Select the required size of "Travelling Lugs" from the table below:

LUGS	SHORT SCREWS (TRS60)	
	RANGE OF PANEL THICKNESSES	
	(min)	(max)
Short	40mm/1.57ins	46mm/1.81ins
Medium	22mm/0.87ins	28mm/1.10ins
Long	4mm/0.16ins	10mm/0.39ins

Table 6

(3) Fit the screws through the CODEGUARD enclosure and using Tool (Part no. 118-1, (Figure 13)), drive them into the Lugs.

Rotate the screw anti-clockwise to set the Lugs to the retracted position.

Figure 12

Tool Part no. 118-1

Figure 13

(4) Enter the CODEGUARD through the aperture, fitting the optional escutcheon if this is to be used, then tighten the screws using Tool, Part no. 118-1.

This rotates the Lugs to the engaged position due to friction between the thread and the Lug.

If the thread becomes loose with use, apply a suitable threadlocking compound to restore the friction.

In order to maintain IP65 rating it is essential that the Keypad is mounted in the correct enclosure and sealed with a suitable silicone sealant such as Dow Corning® 738.

Surface mounting using accessory SMK-2/E

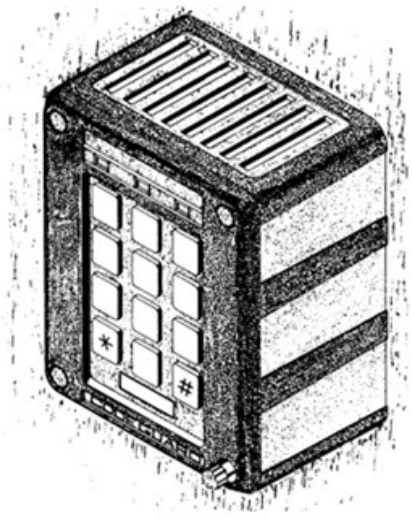

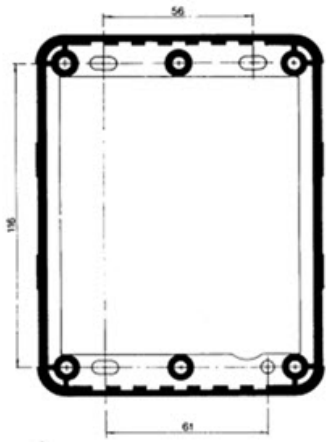

Figure 14

(1) Mount Part no. **SMK-2/E** at the required height; usually about 1676mm (66ins) unless the low level 30 degrees tilted position is required as described at the beginning of this section.

(2) Mount the surface mount accessory using fixings appropriate to the situation and make the necessary hole for the connecting cables.

(3) Attach the plug to the cable then plug this into the CODEGUARD and assemble it into the Surface Mount Accessory.

(4) Retain the CODEGUARD by fitting the Tamper Resistant Screws (Part no. **TRS-60**) using Tool Part no. 118-1.

(5) For external mounting use **TRS-60** with 'O' ring supplied and seal using a bead of silicone around the front edge of Keypad and also where the **SMK-2/E** mounting interfaces with the wall. A suitable silicone sealant is Dow Corning® 738.

Outline Dimensions of the CODEGUARD (mm)

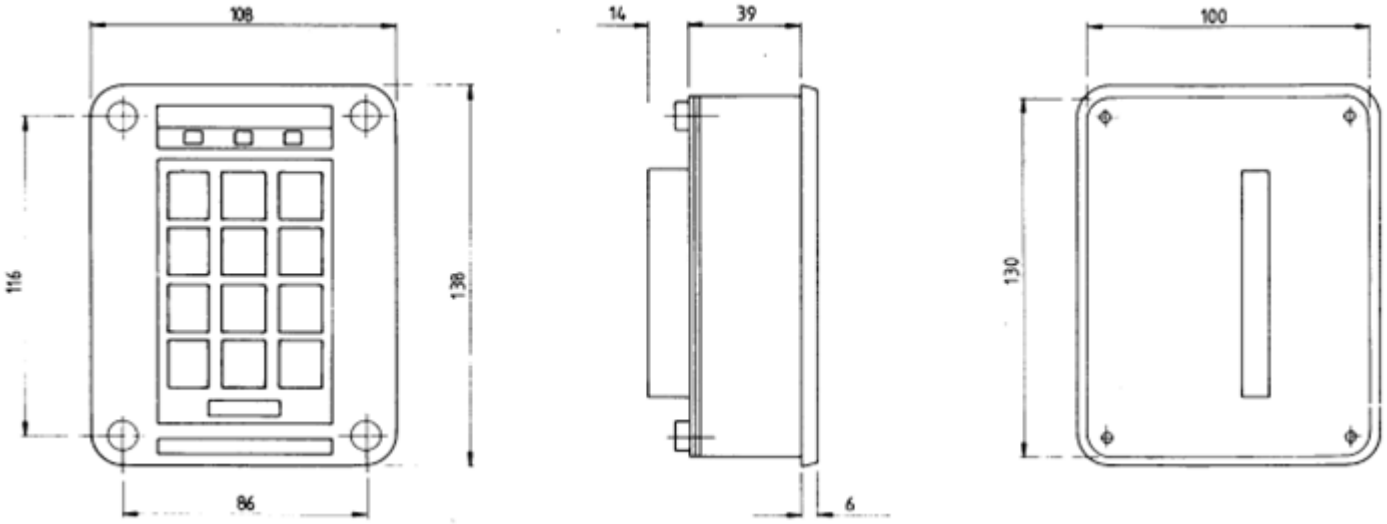

Figure 15

User Installation Notes:

CODEGUARD SECURITY LTD

3 Saxon Way, Melbourn, South Cambridgeshire, SG8 6DN, UK
t: +44 (0) 1763 849 762
e: mail@codeguardsecurity.com
w: www.codeguardsecurity.com