**FALCON**®

# X-Series

## X101-X581

| | |
|---|---|
| **Door Type:** | Wood or Composite, Flat or Beveled |
| **Door Thickness:** | 1¾" (44mm) – 2" (51mm) |
| **Faceplate:** | Round Corner, 9⁄16" (14mm) Radius, 1⅛" (25mm) wide |
| **Backsets:** | FX104-C, 2⅜" (60mm) \| FX104-D, 2¾" (70mm) \| FX104-F, 5" (127mm) |

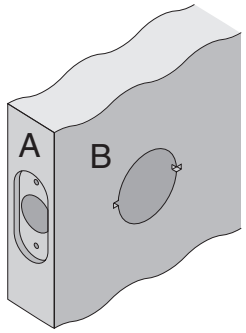


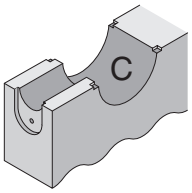


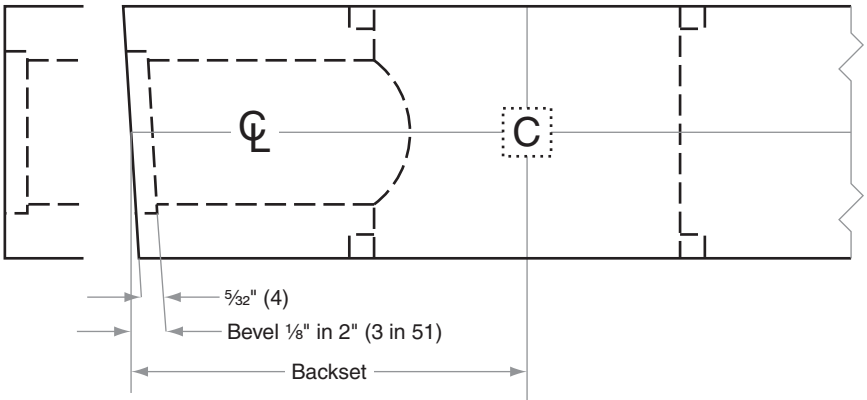


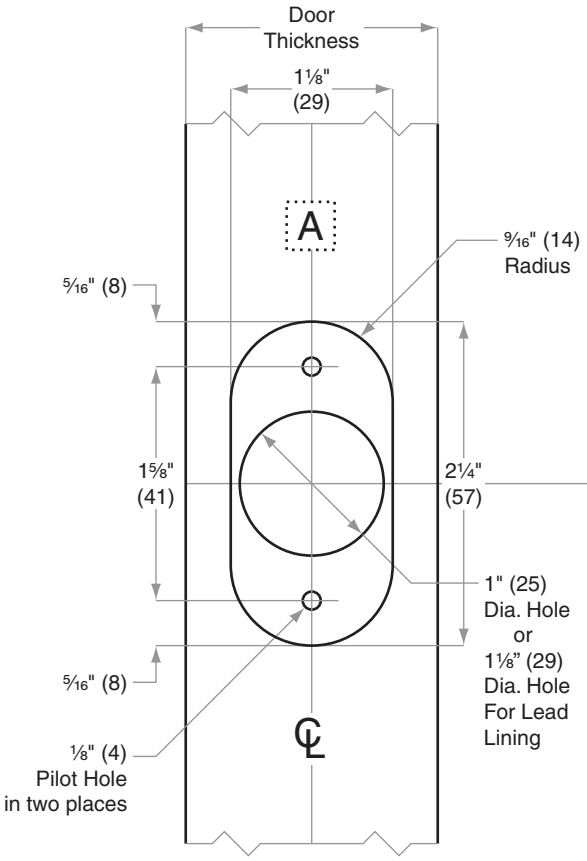


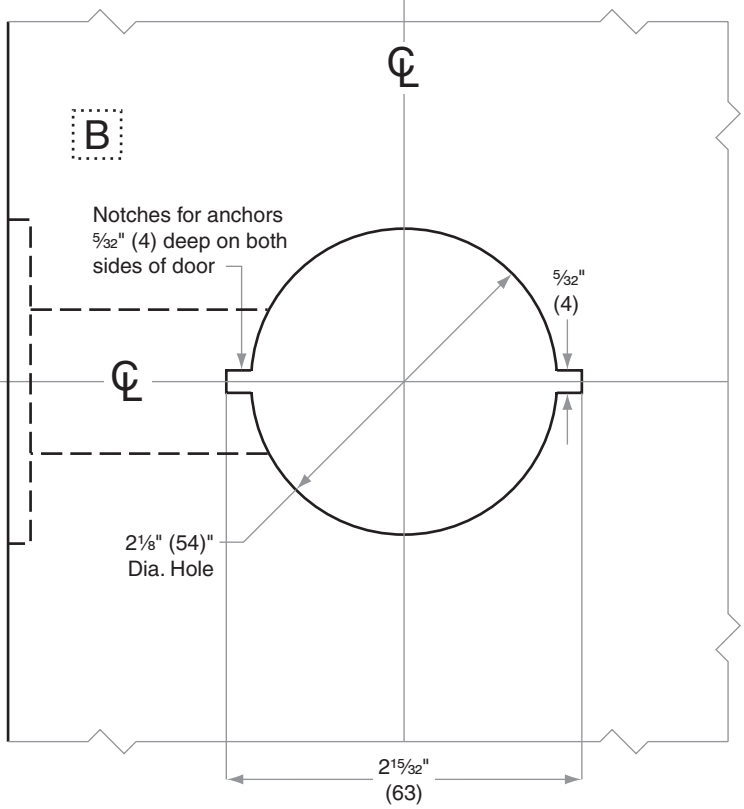


**Dimensions shown in parentheses ( ) are in millimeters.**

Door preparation template

# FX104

© 2014 Allegion
FX104 Rev. 08/14
www.allegion.com/us