ND-Series

Models 14-042 Anti-friction fire door deadlatch, ¾" throw

Door Type:	Wood or composite
Door Thickness:	1⅜" (35 mm)–6" (152 mm)
Faceplate:	Square Corner, 1⅛" (29 mm) wide x 2¼" (57 mm)
Backset:	2¾" (70 mm)

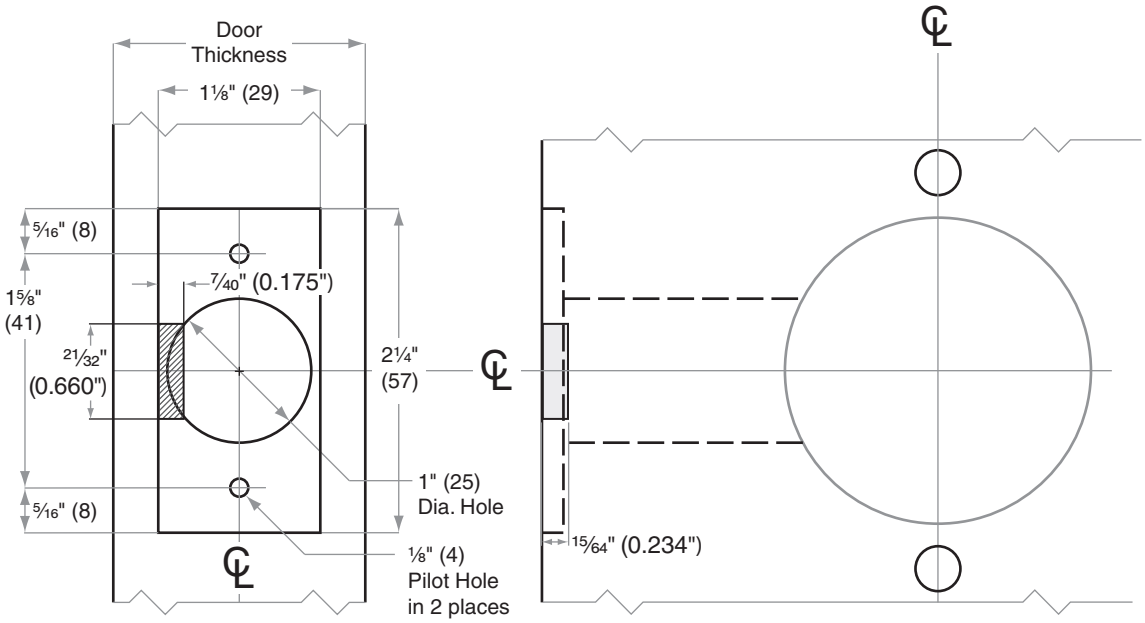

Shaded area material should be cut out.

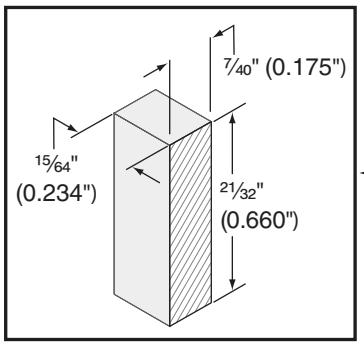

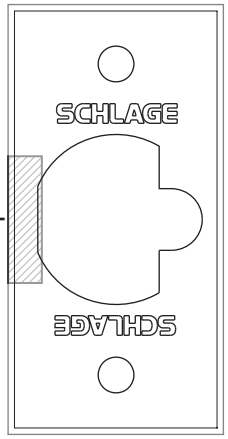

Latch faceplate

Dimensions shown in parentheses ( ) are in millimeters.

Door preparation template

ND407

© 2016 Allegion
ND407 Rev. 12/16
www.allegion.com/us