H-Series

H110H, H153H, H180H, H185H

Door Type:	Metal, Flat or Beveled
Door Thickness:	1⅜" (35 mm)–1¾" (44 mm)
Faceplate:	Square Corner, 1" (25 mm) wide
Backsets:	**2⅜" (60 mm)** | 2¾" (70 mm)

For metal door installations, suitable reinforcement is required to support latch in center of door to prevent lateral movement

This template is for use with the adapter ring for a 2⅛" (54) prepped hole, both upper and lower

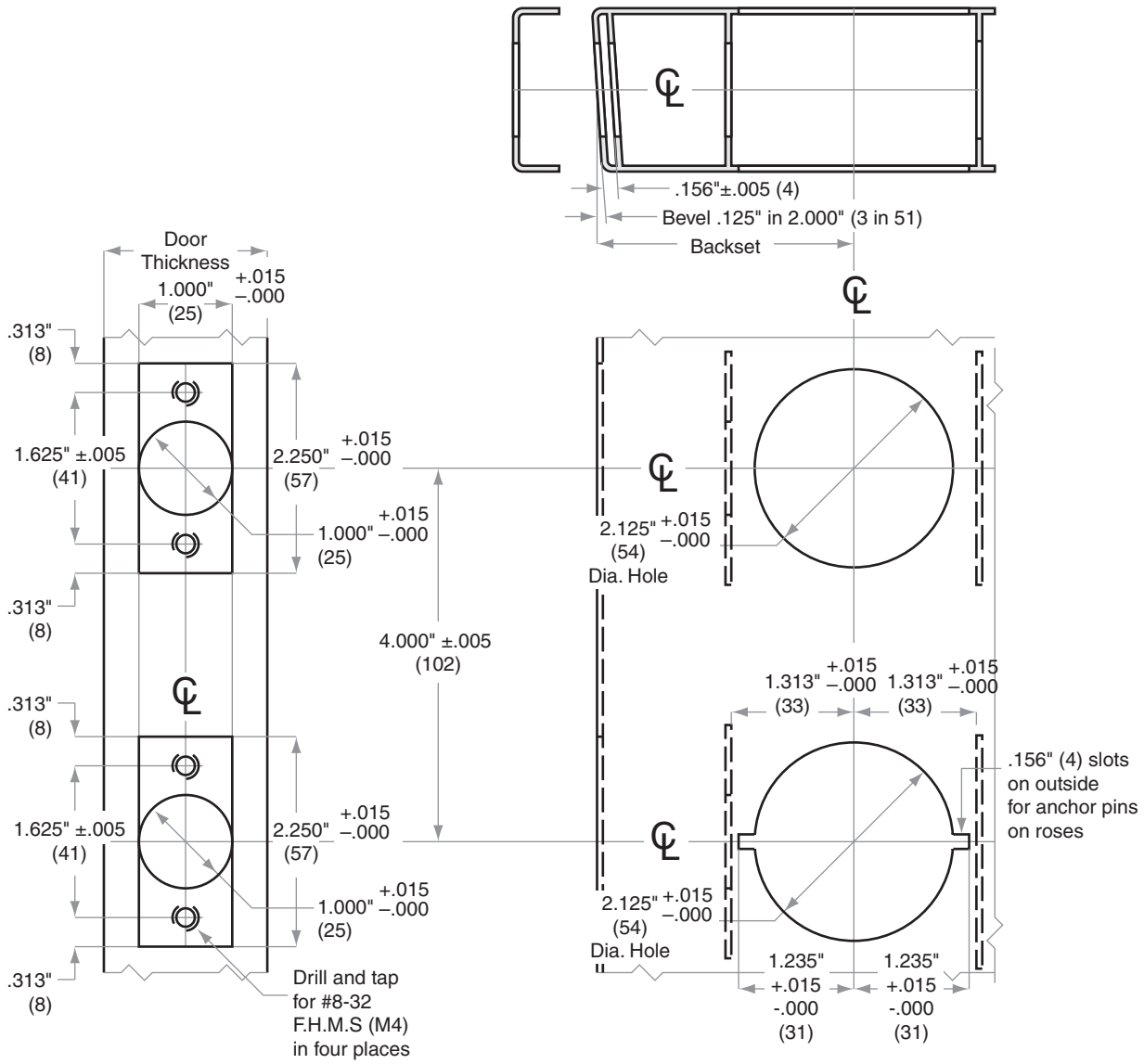

Dimensions shown in parentheses ( ) are in millimeters.

Door preparation template

H873

© 2014 Allegion
H873 Rev. 06/14
www.allegion.com/us