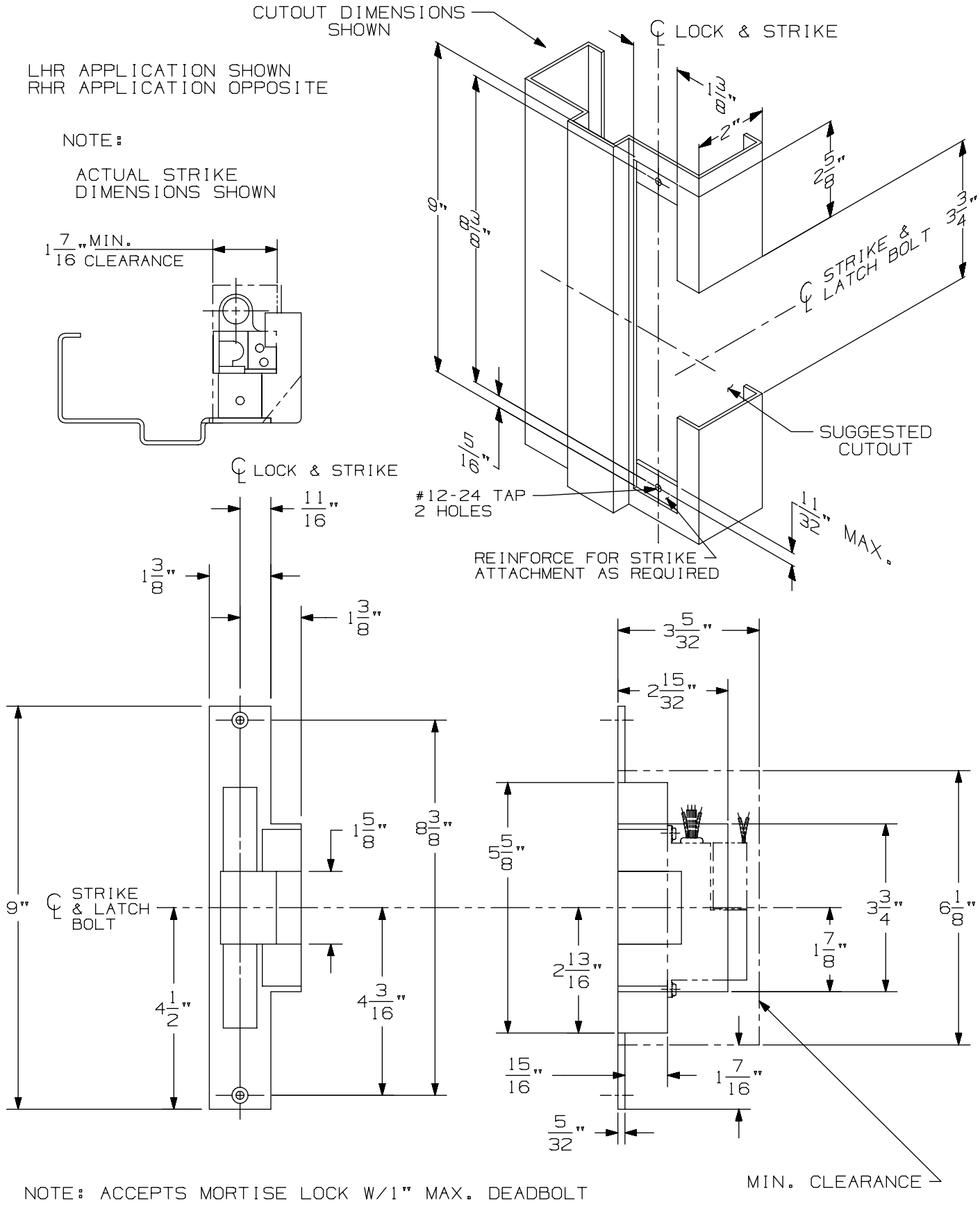

NOTE: ACCEPTS MORTISE LOCK W/1" MAX. DEADBOLT

6216 Electric Strike

VON DUPRIN®

NOTES: SEE MASTER SHEET #10001 FOR SUGGESTED REINFORCING

TEMPLATE NUMBER: 30235_a

DATE: 05-28-13