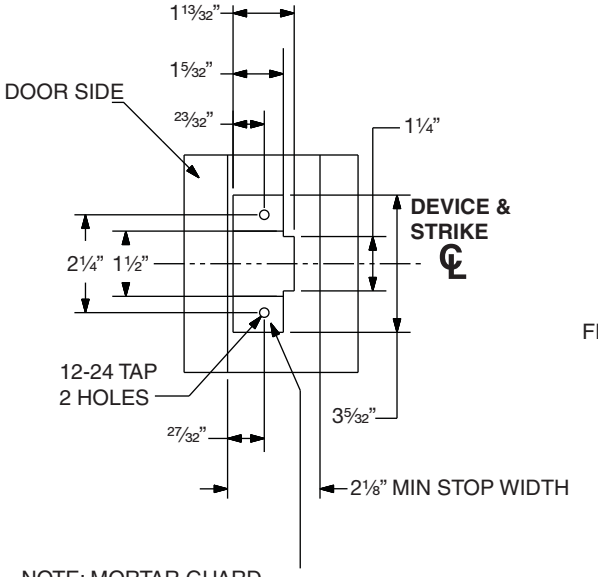

NOTE: MORTAR GUARD SHOULD BE PROVIDED TO PROTECT SOFFIT LATCH BOLT ASSEMBLY

REINFORCING REQUIRED FOR SOFFIT LATCH MUST BE RECESSED ⅛" FROM TOP SURFACE OF STEP

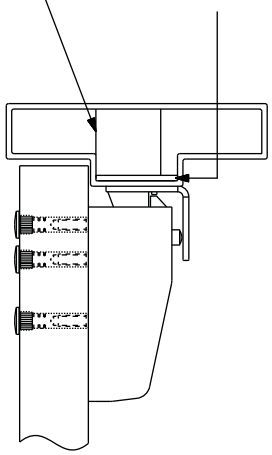

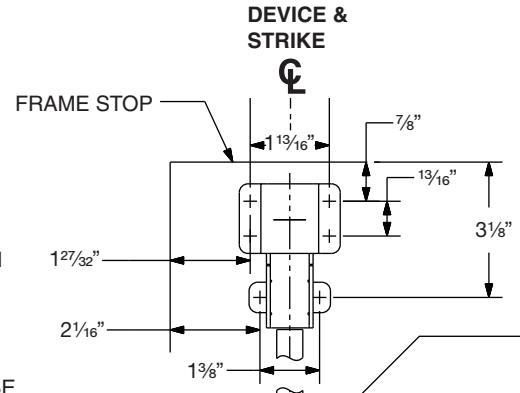

ROD GUIDE IS POSITIONED EQUAL DISTANCE FROM LATCH AND CENTER CASE

APPLICATION	PREPARATION
990 TRIM APPLICATION OR SEXBOLT APPLICATION	¼" DIA THIS SIDE 13/32" DIA OPPOSITE SIDE - 4 PLACES

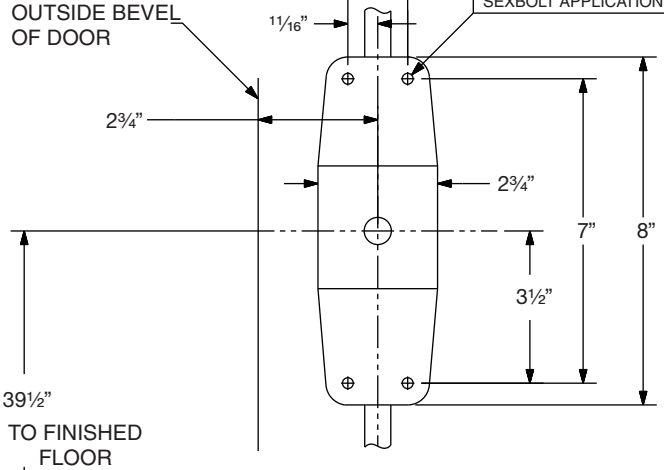

ROD GUIDE IS POSITIONED EQUAL DISTANCE FROM LATCH AND CENTER CASE

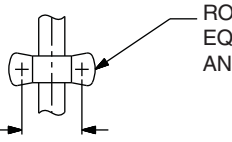

*RECOMMENDED DOOR UNDERCUT IS 1/4" FROM FINISHED FLOOR (TORNADO, PANIC, AND FIRE) OR 1/8" FROM THRESHOLD (HURRICANE)

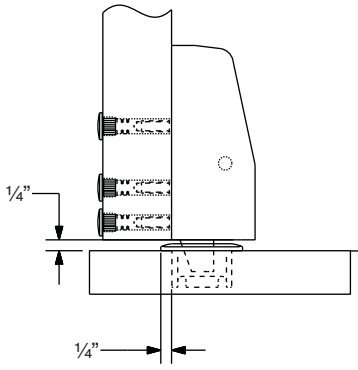

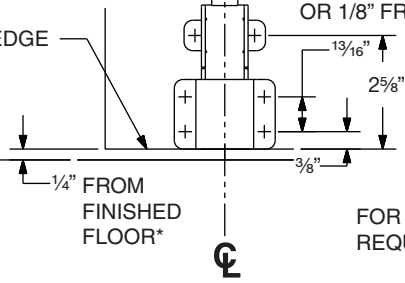

FOR OUTSIDE TRIM PREPARATION, WHEN REQUIRED, SEE ADDITIONAL TRIM TEMPLATE

WS9827/WS9927 & WS9827-F/WS9927-F Windstorm Exit Devices

VON DUPRIN®

NOTES: SEE MASTER SHEET #10001 FOR SUGGESTED REINFORCING

TEMPLATE NUMBER: 10376_c

DATE: 10-16-17