GT-Series

Terminal User's Guide

Ingersoll Rand

Contents

Introduction

The Least You Should Know

before installing and setting up the terminal, you should read and understand ***Important Information for Installers and Terminal Administrators*** on page 5

Using the GT-Series Terminal

The GT-Series Terminal is the first member of the Schlage G-Series biometric hand geometry time and attendance terminals. The GT-Series Terminal records and stores the three dimensional shape of the human hand for comparison and identity verification. Upon verification, the terminal records the time, date, user ID number, and collected time and attendance data and makes this information available for collection by a host computer. The terminal can produce an output to operate an auxiliary device, such as an electronic door lock or signal bell, and can communicate with a host computer. The terminal also has auxiliary inputs that can be used to control other systems.

A third-party/custom host application communicates with GT-Series Terminals across a TCP/IP network, maintaining and storing data collected by the terminals, analyzing and updating data, maintaining security, and initiating alarms as necessary. Access to this data is achieved through a web browser or custom application. The GT-Series Terminal provides employee identification verification and includes the sophisticated operating features one expects in a time and attendance terminal. Because of this unique combination of capabilities, the GT-Series Terminal provides the most accurate and flexible time and attendance data collection terminal available.

Biometrics

Schlage offers hand geometry terminals, one of the most widely used biometric technologies, for time and attendance applications. Hand geometry technology uses the size and shape of the person's hand to verify the user's identity. Schlage biometric solutions also offer multi-authentication options. Smart card, proximity and magnetic stripe readers can be integrated into the terminals to provide an extra layer of security customized to the application requirements. Some of the world's largest providers of time and attendance systems recommend Schlage's HandPunch terminals as part of their total solution. By using biometric technology, corporations reduce payroll costs and eliminate "buddypunching" fraud.

Principles of Operation

The GT-400 terminal uses low-level infrared light, optics and a CMOS (IC chip) camera to capture a threedimensional image of the hand. Using advanced microprocessor technology, the terminal converts the image to an encrypted electronic template. It stores the template in a database with the user's ID number. To gain access, the user enters his or her ID number using the terminal keypad or uses an optional, built-in card reader. The terminal prompts the user to place his or her hand on the terminal's platen. The terminal compares the hand on the platen with the user's unique template. If the templates match, the terminal records the transaction for

processing.

Database Synchronization

Synchronization, when used in this guide, refers to the process by which the database is updated on both the terminal and the host application. Synchronization only occurs on networked terminals. When synchronization occurs, the terminal and the host application compare their databases and make sure they both have the most current data. Every synchronization results in the host and terminal databases being identical.

Command Menus

Command menus are the menus in the terminal that are used to configure the terminal. The command menus can be accessed by pressing ESC and then ENTER from the ready screen. If the terminal is a new terminal and has no users, the command menus will immediately appear. After the administrator has been created and enrolled, verification will be required to access the command menus.

Verification

Verification refers to the process of placing the hand on the terminal platen as a part of the authentication process. Authentication consists of entering a user identification number on the terminal's alpha-numeric keypad and verification of the hand.

Features

Function Keys
Function keys are used to select menu options displayed on the LCD screen.

Navigation Keypad
The navigation keypad is used to scroll through lists or to move forward or backward in text fields.

Alpha-Numeric Keypad
The alpha-numeric keypad is used to enter text or numbers into the terminal.

Finger Pins
Finger pins are used to position the hand on the terminal platen.

Hand Placement Outline
The hand placement outline is a visual guide for hand placement on the terminal platen.

Platen
The platen is the surface upon which the hand is placed for verificaton.

LCD Screen
The LCD screen shows menus and messages on the terminal.

LED Bar
The LED bar gives a visual indication of terminal status.

Hand Placement Guide
The hand placement guide gives a visual indication of hand placement on the platen. Red LED indicators light when fingers are not in the correct position in relation to the finger pins.

Side Cover
The side covers are removable to access screw holes for mounting the terminal to the wall plate.

Specifications

Size:	8 inches (20.32 cm) wide by 11.18 inches (28.40 cm) high by 7.52 inches (19.10 cm) deep
Weight:	5.60 lbs (2.54 kg) – 6.90 lbs (3.13 kg) with optional backup
Power:	12 VDC nominal (10.8 to 13.5 VDC), 4.5 Watts max. Linear power supply recommended
Transient Protection:	8,000 volts – all terminals
Reverse Voltage:	On power input
Environment:	Operating: 32°F to 113°F (0°C to 45°C) Relative humidity: 5% to 95%, non-condensing non-operating (storage): -40°F to 185°F (-40°C to 85°C)
Verification Time:	Less than one second
Date Retention:	3 years using a standard internal lithium battery
Transaction Buffer:	Memory card-dependant
Baud Rate:	9600 to 115200 bps
Communications:	TCP/IP over ethernet – 10/100 Base T
Function Keys:	8 programmable soft keys
Alarm Monitoring:	Unit tamper
Relay Output:	1 – 250 VAC @ 10A
Battery Backup (optional):	2 hour minimum run time

Table 3.1: Terminal Specifications

Using the GT Series Terminal Keypad

Types of Keys

There are three types of keys used to make entries into the terminal. Each will be indicated in this guide as shown below.

Type of Key	Location and Purpose	Symbol
Function Key	These keys are located on both sides of the terminal screen. They are used to navigate through the command menus.	
Alpha-Numeric Key	These keys are located in the terminal keypad. They are used to enter letters and numbers into the terminal.	1 .-+
Navigation Pad	These keys are located to the left of the terminal keypad. They are used to navigate through lists displayed on the terminal screen. The middle key can be used as an “Enter” or “Select” key.	

Table 3.2: Types of Terminal Keys and Corresponding Symbols

Important Information for Installers and Terminal Administrators

➔ *Field installers and terminal administrators should read this section thoroughly before attempting to install or configure a GT-Series Terminal site. It explains important concepts and lists required administrative terminal operations.*

Network Setup and Ethernet Switches

For best performance, it is recommended that you use ethernet switches to connect the terminal(s) to the host, rather than ethernet hubs. Using ethernet hubs to connect the terminal(s) to the host may lead to terminal instability. If instability is encountered while using ethernet hubs, you may need to reboot the terminal(s).

Power-on and Shutdown Precautions

- If your terminal is equipped with a backup battery, it should be connected after power has been applied to the terminal.

➔ *See **Making Back Board Connections** on page 13 for more information.*

- The network (ethernet) cable must be connected to the terminal before applying power. The terminal establishes itself on the network during start-up. You will not be able to communicate with the terminal if the cable is not connected before applying power. Other connections, including optional USB, or serial or auxiliary relay connections, should also be made before applying power.

  The terminal must not be disconnected from its power source without shutting down the application first.

Terminal Placement

The recommended height for the terminal's platen is between 40 and 48 inches (102 - 122 cm) from the finished floor. This height conforms to the Americans with Disabilities Act (ADA) standards (40 inches is recommended for ADA standards). All terminals within a site should be placed at the same height.

The terminal should be out of the path of pedestrian and vehicular traffic.

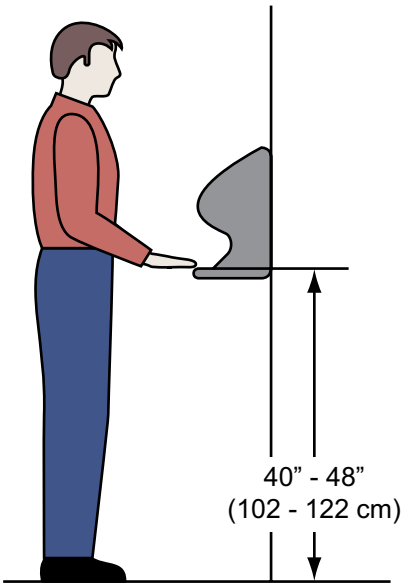

Figure 5.1: Terminal Installation Height

Make sure that the terminal is not exposed to excessive airborne dust, direct sunlight, water, or chemicals.

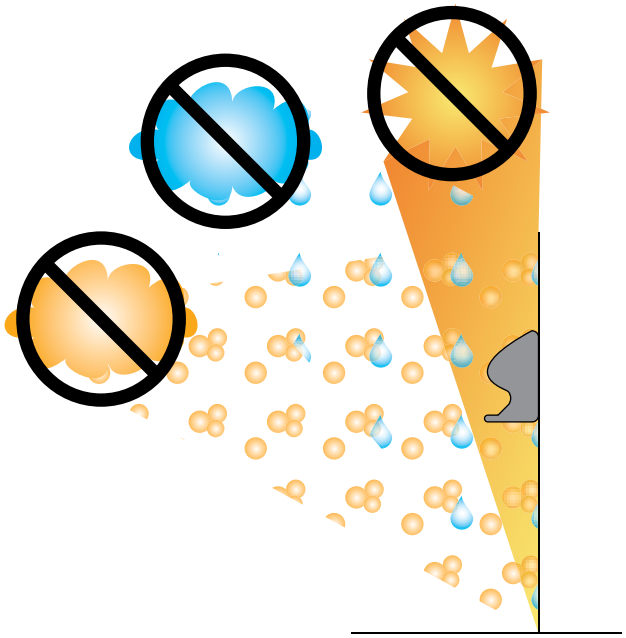

Figure 5.2: Terminal Installation Location

Removing the Terminal from the Box

1. Remove any accessories from the box.
2. Remove the packing materials from the top of the terminal.
3. Lift the terminal from the box. Do not touch the underside of the terminal face.

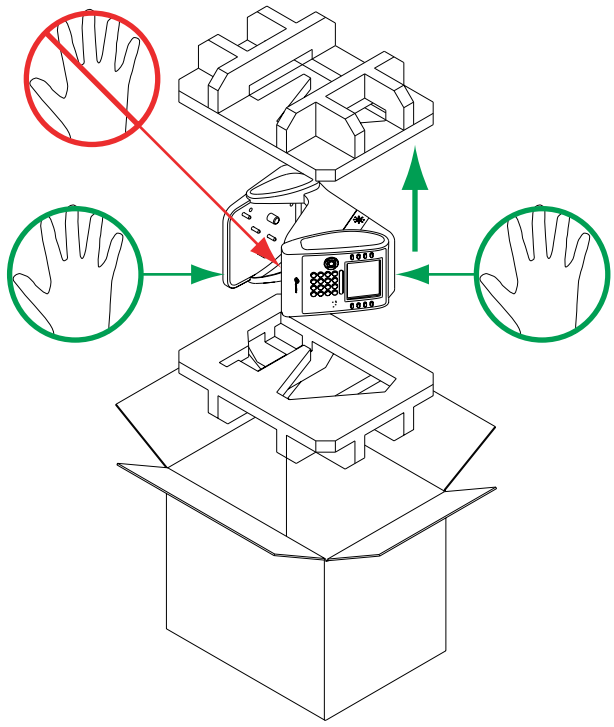

Figure 5.3: Removing the Terminal from the Box

Wall Preparation

These directions and provided hardware are for installation on a hollow wall only. For installation on a solid wall, other means should be used.

1. Measure and mark a point 49 inches (124.5 cm) from the surface of the finished floor.

   ➔ *This point is used by the leveling hole where the top-center point of the terminal should be mounted. At 49 inches, the unit's platen will be 40 inches from the floor.*

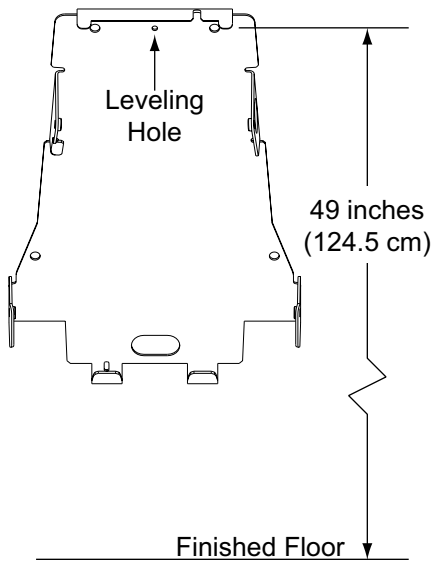

Figure 5.4: Measurements for Terminal Installation

2. Drive a small nail into the wall at the mark.

   ➔ *For a solid wall, pre-drill a ⅛" hole. Insert nail into the hole.*

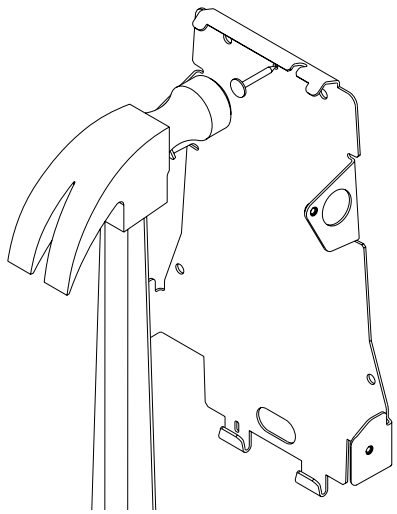

Figure 5.5: Leveling the Terminal, Step 2

3. Hang the wall plate from the leveling hole located near the top of the wall plate.
4. Use a bubble level to ensure that the wall plate is level.

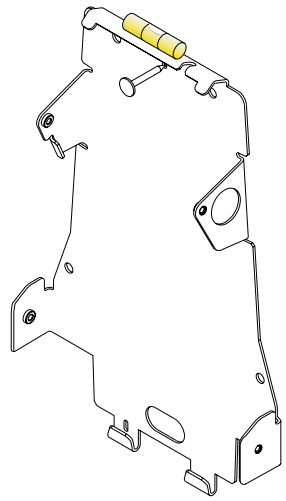

Figure 5.6: Leveling the Terminal, Step 4

5. Mark the locations of the two upper mounting holes and the two lower mounting holes.
   ➔ *For a concealed wiring connection through the wall, mark the rear cable entry hole on the wall plate.*
6. Remove the wall plate and nail.

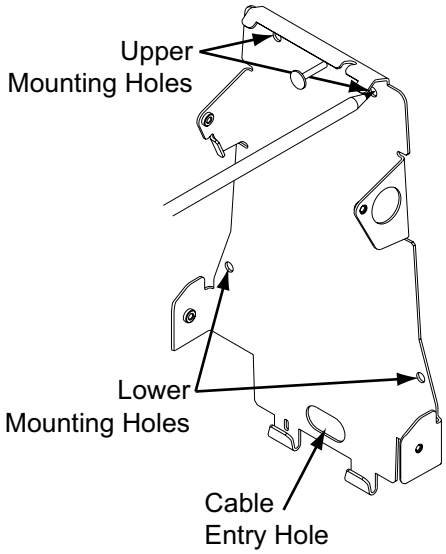

Figure 5.7: Leveling the Terminal, Step 5

7. Drill upper and lower mounting holes.
   - ➔ *For a concealed wiring connection, drill a ½" hole in the center of the outlined rear cable entry hole.*
   - ➔ *Additional holes may be drilled to enlarge hole for concealed wiring connection if necessary.*
8. Clear all dust and debris away from the terminal mounting location.

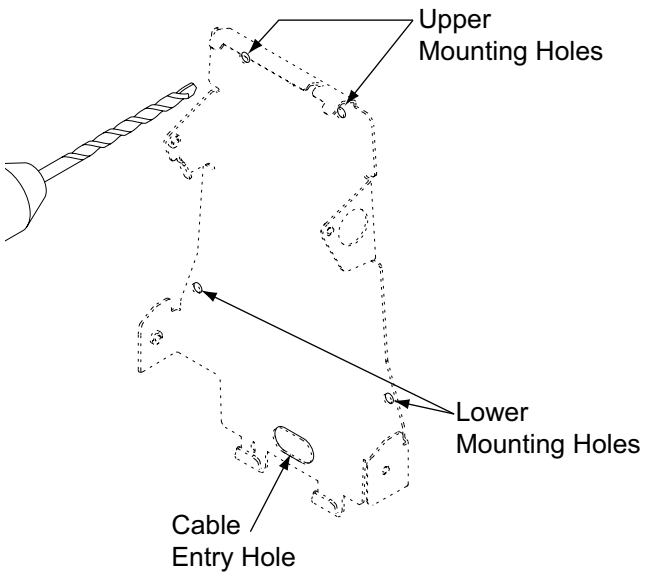

Figure 5.8: Drill Holes

Attaching the Wall Plate

These directions and provided hardware are for installation on a hollow wall only. For installation on a solid wall, other means should be used.

1. Pull all wires through holes in wall (if necessary) and make sure wires are clear of wall plate.
2. Install the four provided fasteners into the mounting hole locations. Then use the four provided screws to attach the plate to the wall.

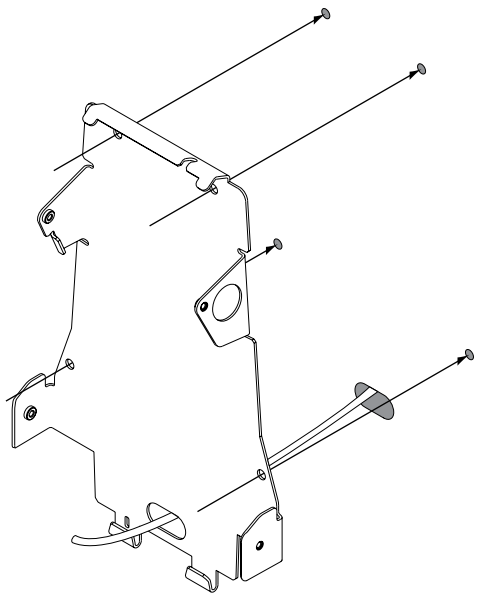

Figure 5.9: Attaching the Wall Plate

Hanging Terminal and Running Wires

1. If the side covers are attached to the terminal, they must be removed before hanging the terminal on the wall plate.

   ➔ *See **Removing Side Covers** on page 15 for more information*

2. Slide slots in terminal over hooks on wall plate. Allow terminal to rest against the wall while performing the following steps.

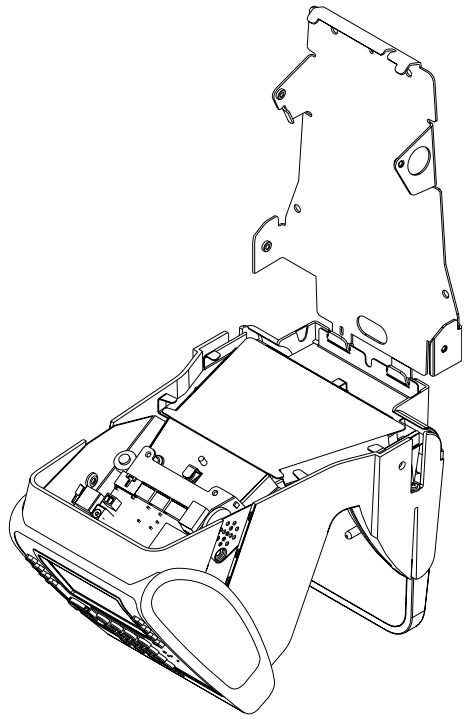

Figure 5.10: Hang the Terminal from the Wall Plate

3. There are several options for running the wiring to the terminal.
   a. Run wiring through hole in wall plate.
   b. Run wiring through slot in terminal.
   c. Run wiring through battery cover (material removal required).

   ➔ *If using option c, locate indentation in battery cover, drill ¼" hole in battery cover indentation and use utility knife to remove excess material.*

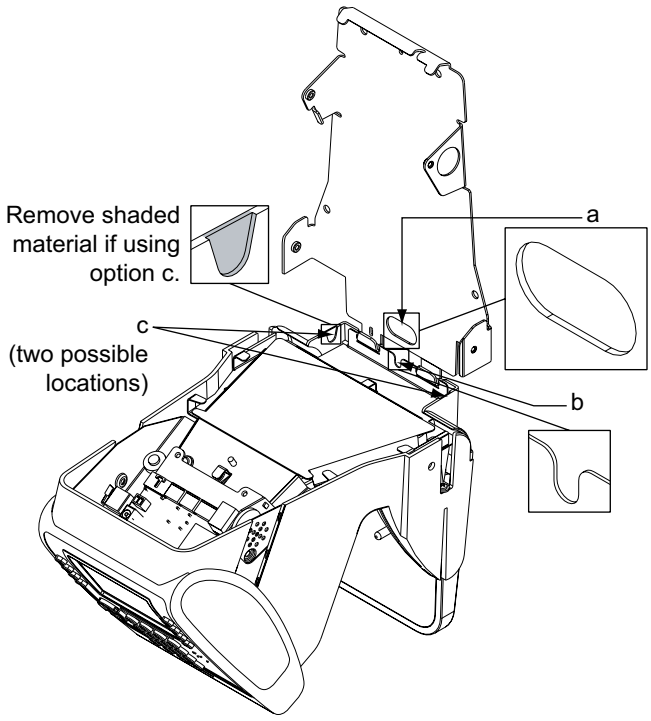

Figure 5.11: Terminal Wiring Options

4. Tuck wires under tabs on terminal to minimize risk of crimping wires.
5. Follow all local electrical codes when routing wire and making the terminal connections.
   - ➔ *For concealed wiring, pull the terminal wiring through the ½" cable entry hole.*
   - ➔ *Ensure there is at least twelve inches of extra cable beyond what is needed to make the required connections to the back board.*
   - ➔ *For conduit wiring, pull an extra twelve inches of cable through the conduit beyond what is needed to make the required connections to the back board.*
   - ➔ *You may need to run the cable and then attach the connectors in order to fit cables through necessary holes and/or slots.*

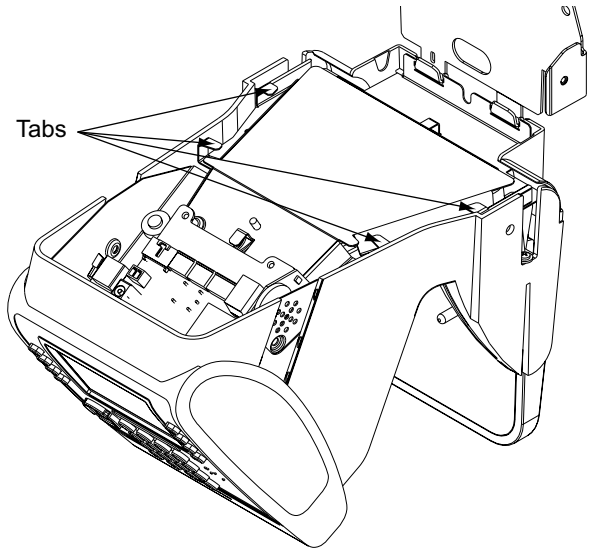

Figure 5.12: Wire Tabs

Making Back Board Connections

Use caution when making connections to the back board to avoid damage. Be aware of possible damage due to electrostatic discharge (ESD). ESD is of particular concern when working on carpeted surfaces and in dry environments. Use a ground strap to minimize ESD concerns.

DO NOT apply power until you are ready to configure the terminal!

DO NOT connect backup battery (if using) until after main power has been supplied!

1. Connect the earth ground. The earth ground connection is made to the ground pin on the terminal. Bundle all ground connections into one crimp lug and attach the lug to the ground pin with a 8-32 nut.
2. Connect the ethernet cable to the ethernet connection socket inside the terminal casing.
3. DO NOT apply power until you are ready to configure the terminal. Connect the P1 plug to the twisted pair per the following: Pin 1: Ground, Pin 2: Power.

   ➔ *See **Important Information for Installers and Terminal Administrators** on page 5 for more information.*

4. If using the optional backup battery, locate the backup battery relay, but DO NOT connect backup battery until after the main power has been connected.
5. Make other back board connections as necessary. Use the diagram below as a reference.

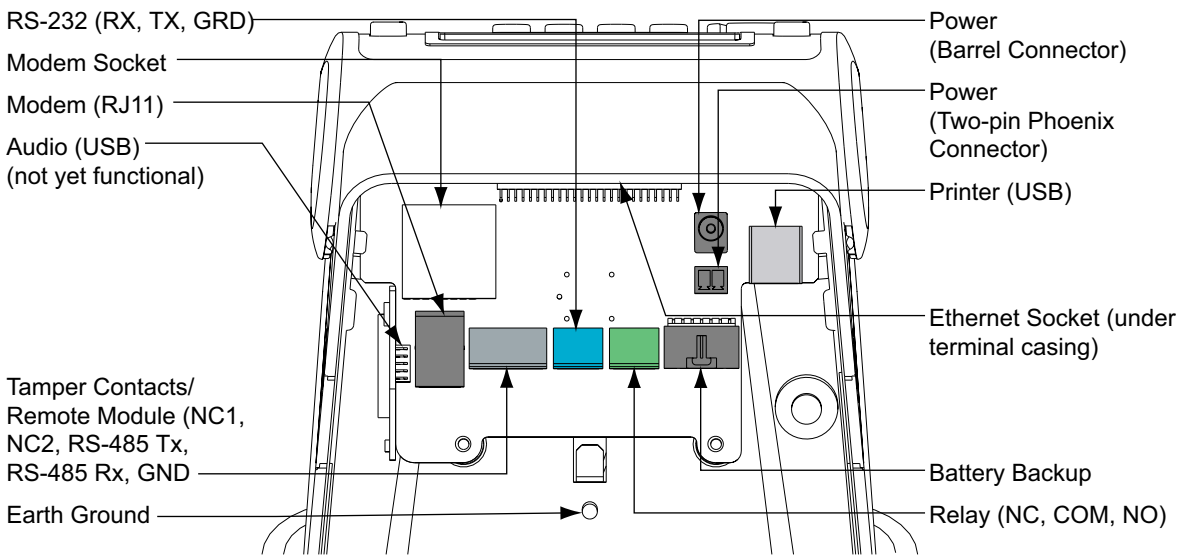

Figure 5.13: Back Board Connections

Attaching the Ferrite Clip

The ferrite clip must be attached to the terminal's power cord in order to be FCC compliant.

1. Make a loop in the power cord approximately six (6) inches from the power supply.
   The loop will keep the clip from sliding on the power cord.
2. Clamp the ferrite clip over the loop. Make sure the tabs fully engage.

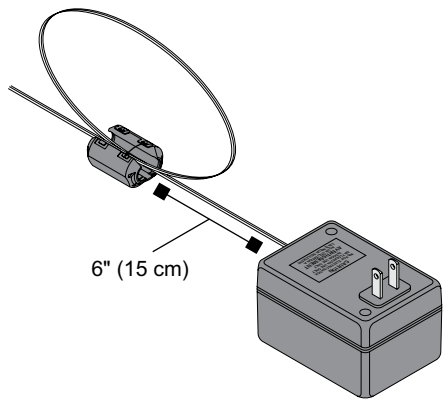

Figure 5.14: Attaching the Ferrite Clip

Configuring the Terminal

You must configure the terminal before completing installation

Go to

Removing and Installing Side Covers

The side covers must be removed in order to attach the terminal to the wall plate.

The terminal may be shipped without the side covers attached.

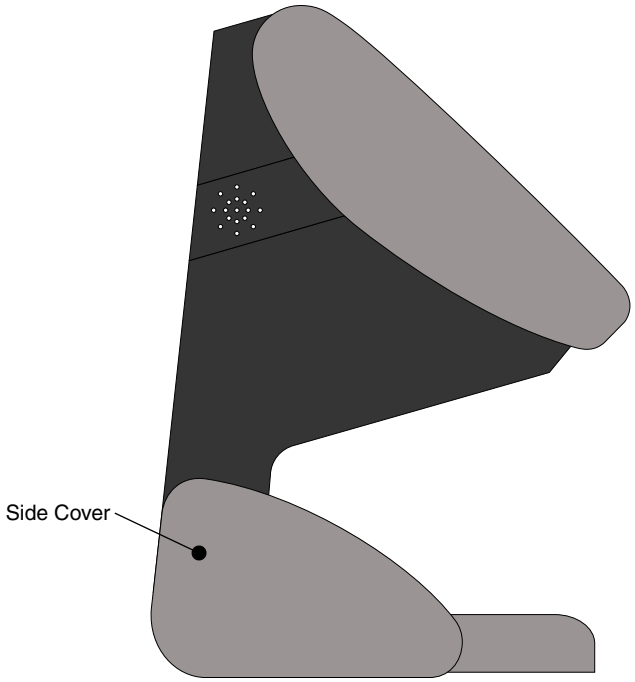

Figure 5.15: Terminal Covers

Removing Side Covers

1. Locate slot on bottom of side cover. Insert a small screwdriver into slot.
2. Rotate screwdriver gently. Side cover will pop off.

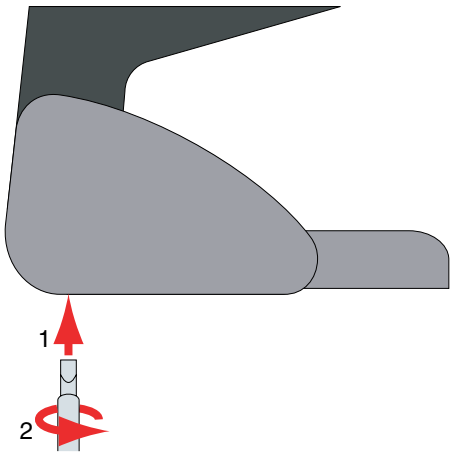

Figure 5.16: Removing the Side Covers

Installing Side Covers

1. Place outside ridge of side cover under edge of terminal body.
2. Rotate side cover toward terminal body and snap into place.

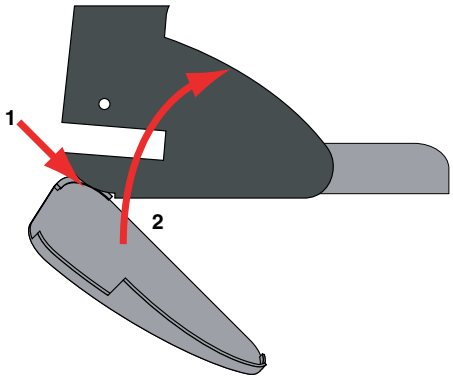

Figure 5.17: Installing the Side Covers

Attaching the Terminal to the Wall Plate

Remove any dust and debris from the mounting site before attaching the terminal. Dust and debris can seriously affect the performance of the terminal.

1. Choose the standard Phillips head screws or the security head screws for installation.

➔ *A special tool is required to install and remove a security head screw*

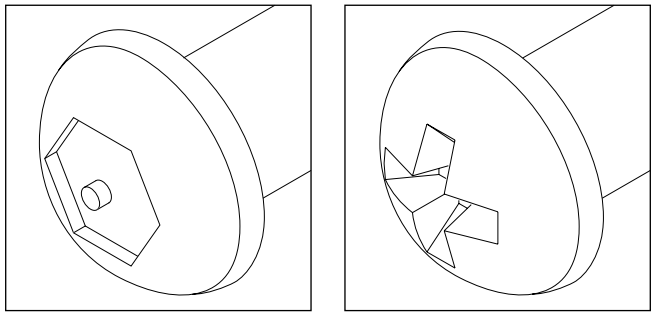

Figure 5.18: Installation Screw Choices

2. Terminal should already be hanging from wall plate.
3. Rotate terminal toward the wall plate. Make sure not to pinch or damage any wiring.
4. Make sure that the screw holes in the body of the terminal are aligned with the screw holes in the wall plate.
5. Install two (2) screws into the lower screw holes.
6. Attach side caps.

   ➔ *See **Installing Side Covers on page 15** for more information.*

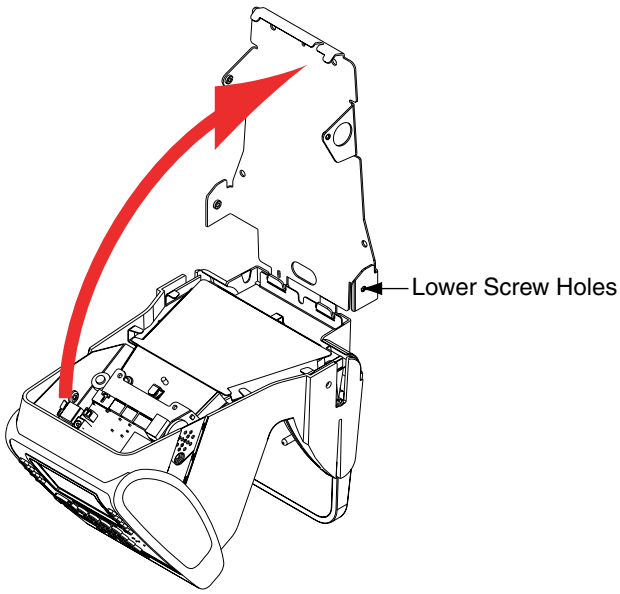

Figure 5.19: Rotate Terminal Towards Wall Plate

Index

R

S

T

U

V

W

X

Ingersoll Rand
Security Technologies

Ingersoll Rand's Security Technologies Sector is a leading global provider of products and services that make environments safe, secure and productive. The Sector's market-leading products include electronic and biometric access control systems; time and attendance and personnel scheduling systems; mechanical locks and portable security, door closers and exit devices, steel doors and frames, architectural hardware and technologies and services for global security markets.

1-877-671-7011 www.schlage.com www.ingersollrand.com

P/N 70100-7507 Rev. F 05/13