THIS DIAGRAM REPRESENTS A GENERIC CONFIGURATION. CUSTOM WIRING DIAGRAMS CAN BE ACQUIRED BY CONTACTING TECHNICAL SUPPORT.

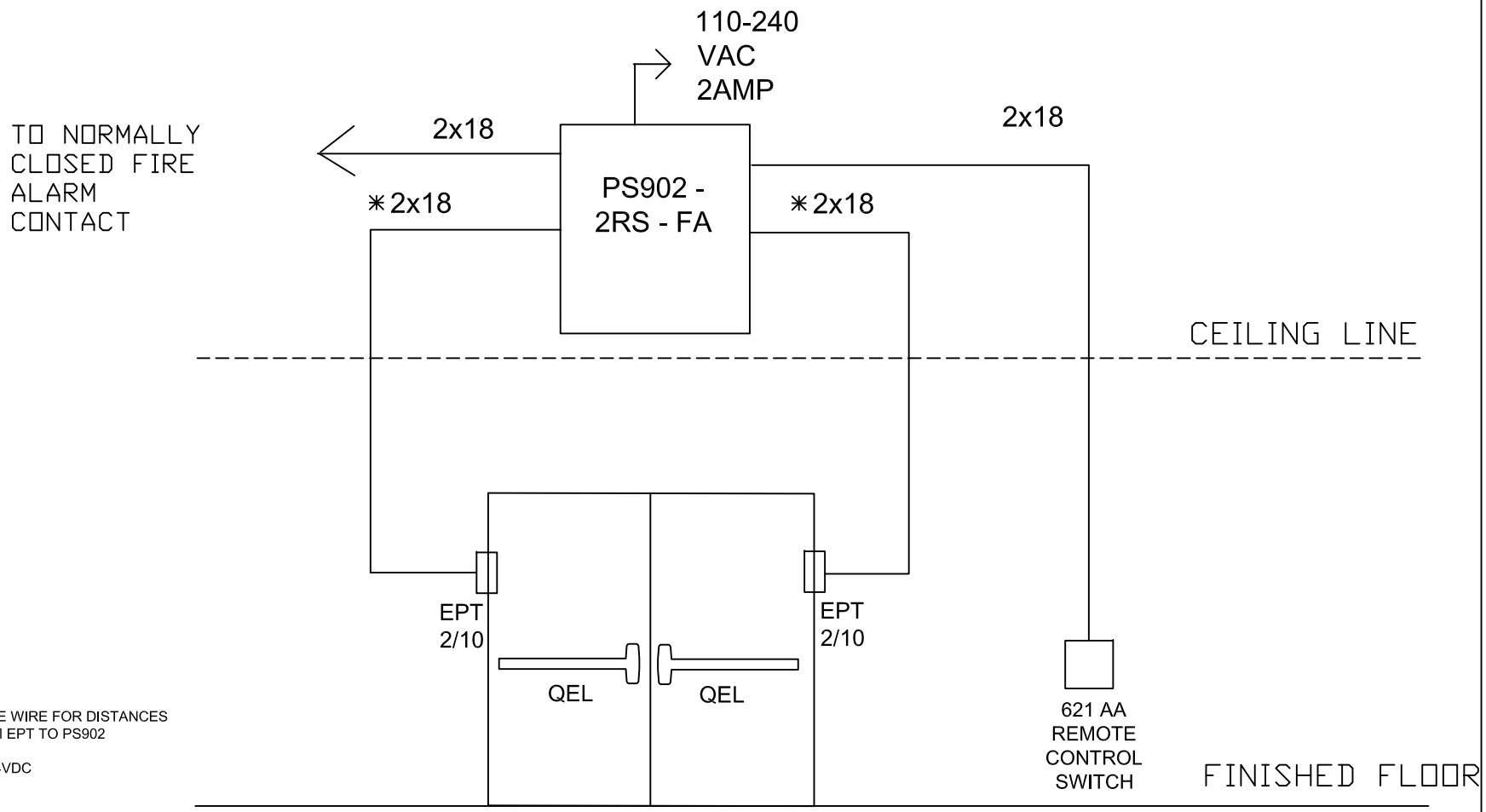

NOTE:
*USE #18 GAUGE WIRE FOR DISTANCES UP TO 200' FROM EPT TO PS902

SET PS902 TO 24VDC

NOTES:
1) ALL LOW VOLTAGE WIRING TO BE STANDARD, MULTI-CONDUCTOR COLOR CODED WITHOUT SPLICES.

2) WIRING TO CONFORM TO APPLICABLE NATIONAL, STATE AND LOCAL ELECTRICAL CODES.

3) REFER TO SPECIFIC PRODUCT INSTALLATION INSTRUCTIONS FOR SPECIFIC WIRING REQUIREMENTS.

4) THIS DRAWING IS FOR GRAPHICAL REPRESENTATION OF PRODUCTS DETAILED IN THE HARDWARE SET ONLY.

5) ADDITIONAL WIRING WILL BE REQUIRED FROM ACP THAT IS NOT SHOWN HERE. CONSULT PROVIDER FOR DETAILS.

HARDWARE USED:
- 2 VON DUPRIN FIRE RATED QEL PANIC DEVICES
- 1 PS902-2RS-FA POWER SUPPLY
- 2 EPT POWER TRANSFERS
- 1 621 AA REMOTE CONTROL PUSH BUTTON
- 1 FIRE ALARM CONTACT

TYPE REMOTE 621AA PB WITH PAIR FIRE RATED QEL DEVICES

OPERATION:
REMOTE CONTROL 621 AA PB TO SIGNAL PAIR FIRE RATED QEL ELECTRIC PANIC BAR TO RETRACT FOR ENTRY.

RELEASING 621AA PUSH BUTTON OR FIRE ALARM WILL CAUSE QEL LATCHES TO EXTEND.

IN THIS EXAMPLE ALL WIRING CONNECTIONS ARE MADE IN PS902 ENCLOSURE.

DATE DRAWN: 03-19-15 REVISION DATE: 03-19-15

copyright 2015

ALLEGION™

TITLE: REMOTE 621AA PB WITH PAIR FIRE RATED QEL PANICS

DRAWING TYPE: RISER DIAGRAM

DWG NO: 110825R

DRAWN/CHECKED BY: B DOVE

REV A

THIS DIAGRAM REPRESENTS A GENERIC CONFIGURATION. CUSTOM WIRING DIAGRAMS CAN BE ACQUIRED BY CONTACTING TECHNICAL SUPPORT.

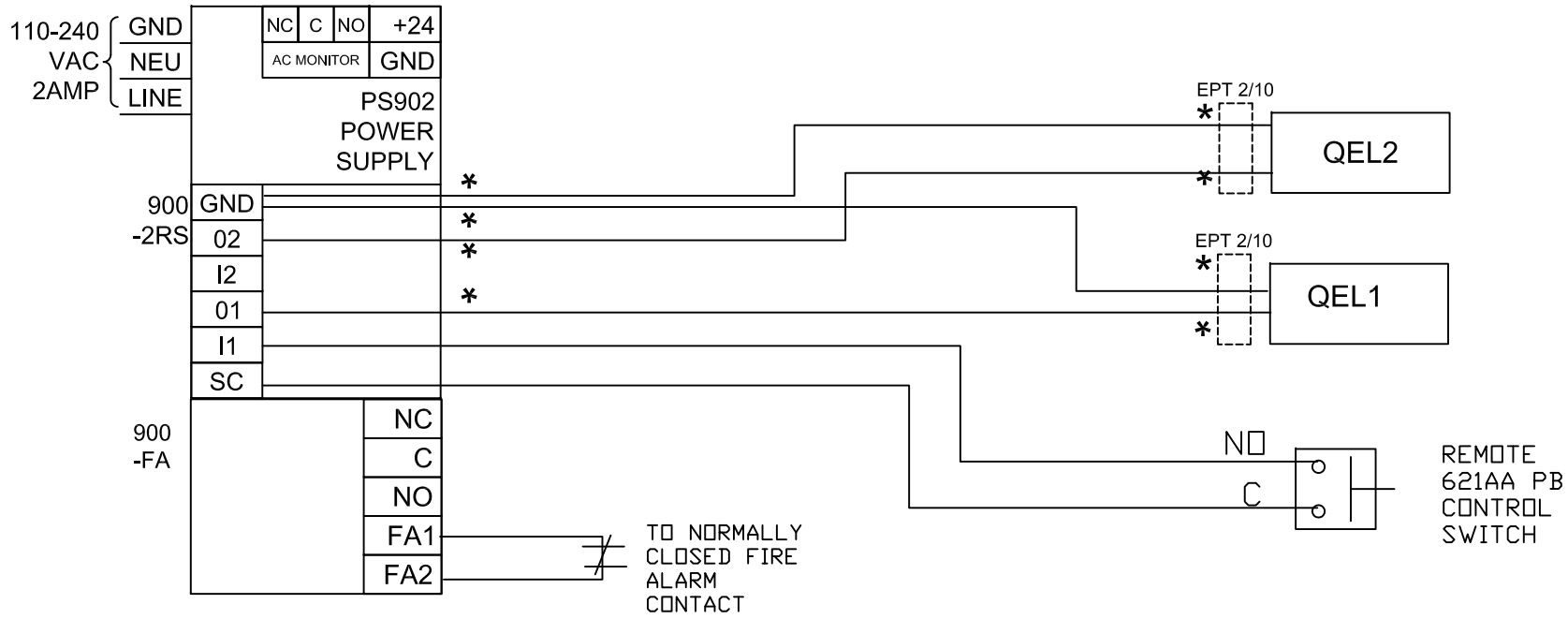

NOTE:
*USE #18 GAUGE WIRE FOR DISTANCES UP TO 200' FROM EPT TO PS902

SET PS902 TO 24VDC

NOTES:
1) ALL LOW VOLTAGE WIRING TO BE STANDARD, MULTI-CONDUCTOR COLOR CODED WITHOUT SPLICES.

2) WIRING TO CONFORM TO APPLICABLE NATIONAL, STATE AND LOCAL ELECTRICAL CODES.

3) REFER TO SPECIFIC PRODUCT INSTALLATION INSTRUCTIONS FOR SPESCIFIC WIRING REQUIREMENTS.

4) THIS DRAWING IS FOR GRAPHICAL REPRESENTATION OF PRODUCTS DETAILED IN THE HARDWARE SET ONLY.

5) ADDITIONAL WIRING WILL BE REQUIRED FROM ACP THAT IS NOT SHOWN HERE. CONSULT PROVIDER FOR DETAILS.

HARDWARE USED:
2 VON DUPRIN FIRE RATED QEL PANIC DEVICES

1 PS902-2RS-FA POWER SUPPLY

2 EPT POWER TRANSFERS

621 AA REMOTE CONTROL SWITCH

1 FIRE ALARM CONTACT

TYPE REMOTE 621AA PB WITH PAIR FIRE RATED QEL DEVICES

OPERATION:
REMOTE CONTROL 621AA PB TO SIGNAL PAIR FIRE RATED QEL ELECTRIC PANIC BARS TO RETRACT FOR ENTRY.

RELEASING 621AA PUSH BUTTON OR FIRE ALARM TO CAUSE QEL LATCHES TO EXTEND.

IN THIS EXAMPLE ALL WIRING CONNECTIONS ARE MADE IN PS902 ENCLOSURE.

DATE DRAWN: 03-19-15 | REVISION DATE: 03-19-15

copyright 2015

ALLEGION™

TITLE: REMOTE 621AA PB WITH PAIR FIRE RATED QEL PANICS

DRAWING TYPE: WIRING DIAGRAM

DWG NO: 110825W

DRAWN/CHECKED BY: B DOVE

REV A