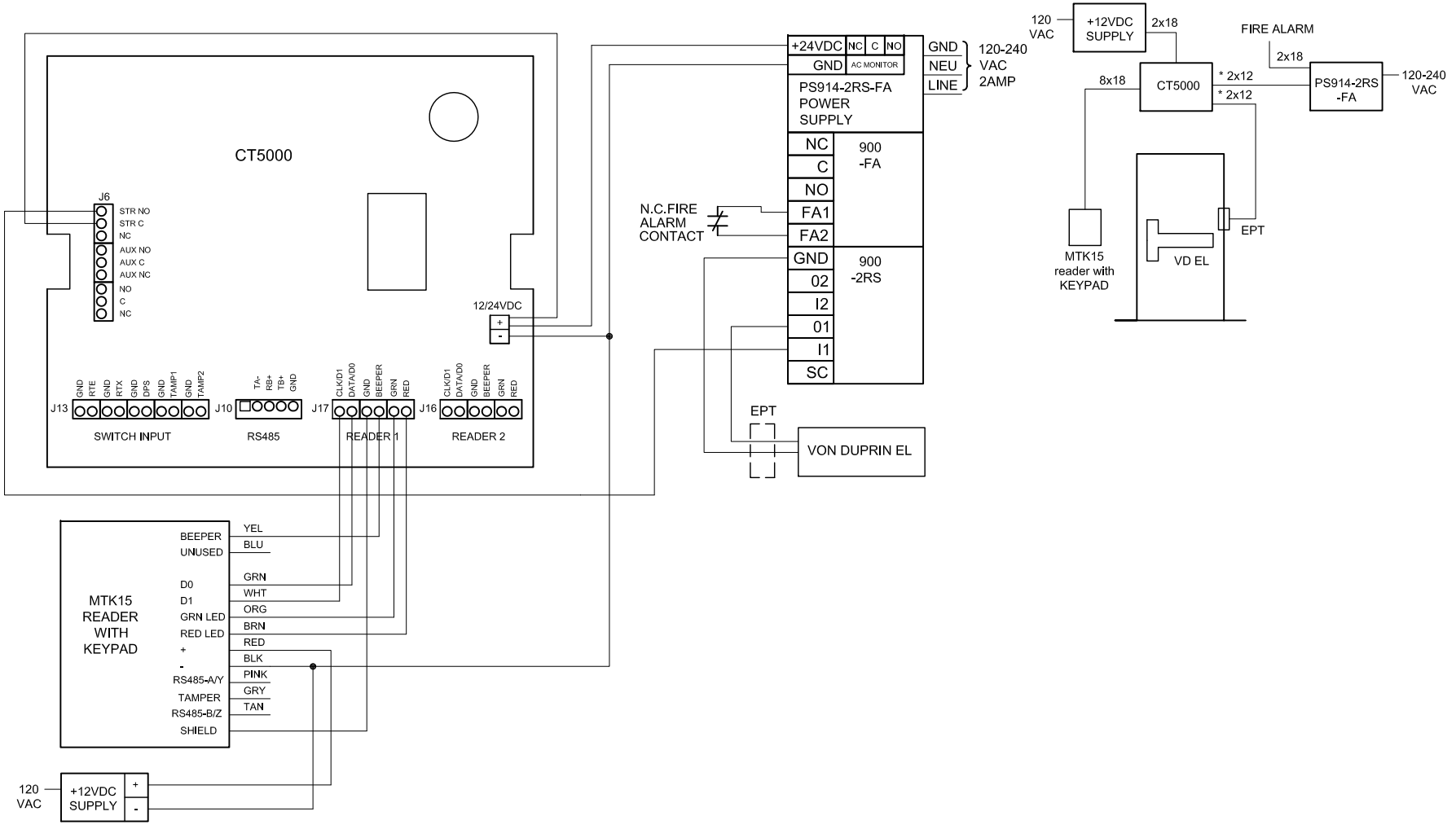

MTK15 TO SIGNAL VD EL TO RETRACT THROUGH SES CT5000.

FIRE ALARM TO DISABLE MTK15 FUNCTION AND CAUSE VD EL TO EXTEND.

IF NOT A FIRE RATED OPENING AND FIRE ALARM IS NOT REQUIRED OMIT FA BOARD IN PS914-2RS-FA POWER SUPPLY.

TWO SEPARATE POWER SUPPLIES ARE NEEDED BECAUSEMTK15 REQUIRES 12VDC SUPPLY AND EL REQUIRES 24VDC WITH INRUSH.

* USE 12 GAUGE WIRE FOR DISTANCES UP TO 200' MAX FROM EPT TO PS914 OR USE 14 GAUGE WIRE FOR DISTANCES UP TO 100' FROM EPT TO PS914.

ALL CONNECTIONS SHOWN MADE IN CT5000 ENCLOSURE.

CREATOR: BRENDA DOVE 02/22/12	TITLE: CT5000/MTK15 WITH VD EL PANIC	222122CT5000 Rev 2
APPROVED: TODD GINTER 02/29/12		insert revision date here