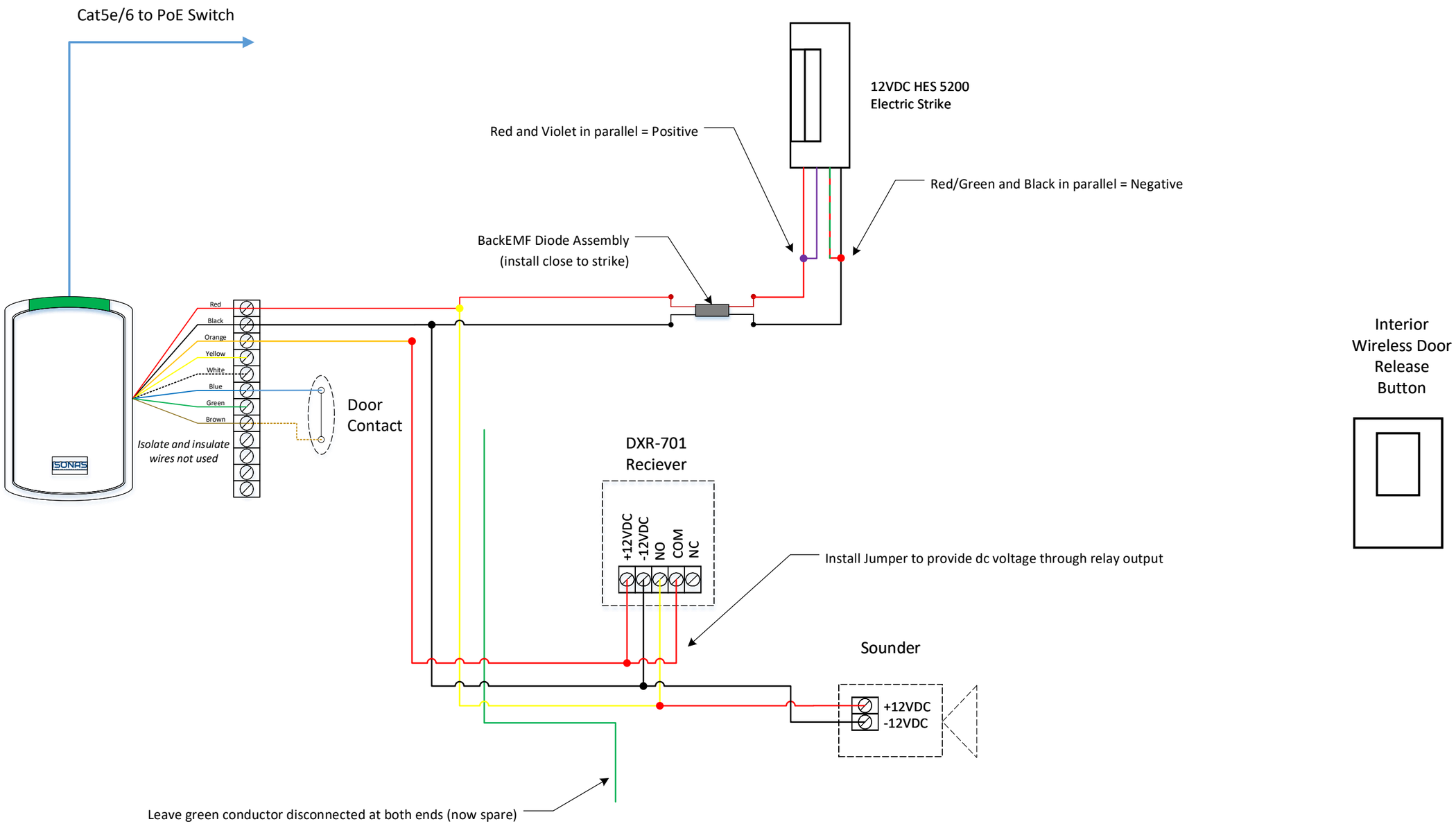

RC-04.PoE.DSM.Strike .DRX-701.Sounder(AxisTechnologies)

Dwg No:	Sheet	of
04-ST-DS.REX	1	1

Date:	Drawn By:	Version:
7-31-18	David Tamarchenko	1.00.00

ISONAS
PURE IP ACCESS CONTROL

4750 Walnut Street Suite 110
Boulder, CO 80301
www.isonas.com