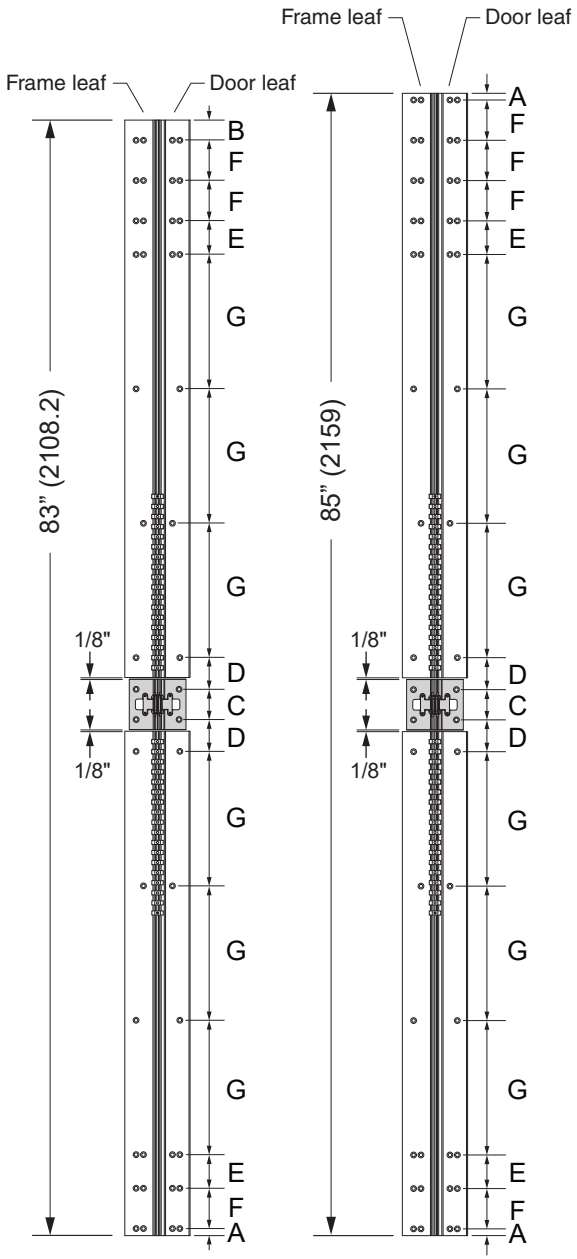

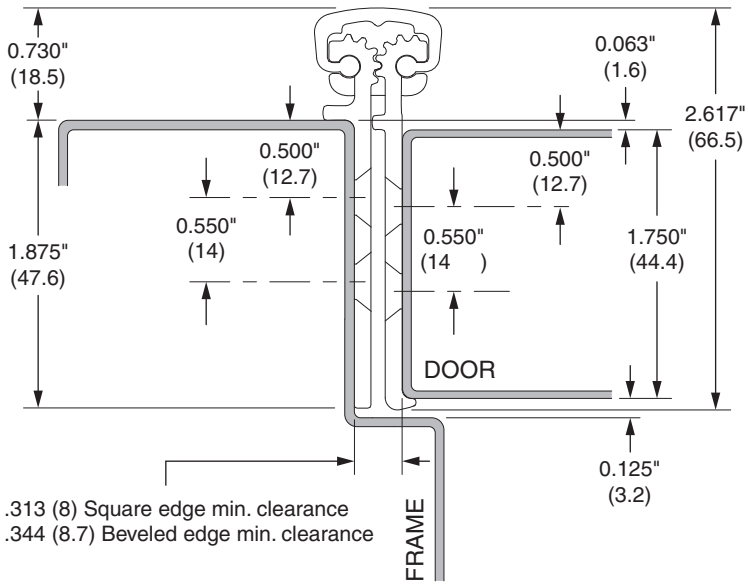

TWP Cutout

TWP requires a 1-1/8" diameter hole in door and frame, located 3/4" from edge of door/edge of frame (pivot side). Position holes 39-1/2" from bottom of hinge for standard location. Custom locations will vary.

NOTE: Debur holes to protect wires from abrasion.

Total Door Undersizing

Single Square Edge Door - 15/32"
Single Bevel Edge Door - 1/2"
Pair of Doors, each leaf, Square Edge Door - 7/16"
Pair of Doors, each leaf, Bevel Edge Door - 15/32"

See installation instructions for reinforcement requirements.

Hole Preparation

Metal Frame:
#12-24 x 3/4" self-drilling tapping screws
#16 pilot drill is recommended for all holes

Wood Frame:
1/8" pilot drill

Vertical distance between holes

	A	B	C	D	E	F	G
Inch	.50"	1.50"	2.25"	2.375"	2.50"	3.00"	10.0"
mm	12.7	38.1	57.2	60.3	63.5	76.2	254

IVES

224XY TWP 83" & 85" FULL MORTISE
WITH EDGE PROTECTOR
CONTINUOUS HINGE PROFILE TEMPLATE

ALLEGION

NOTE: DIMENSIONS IN ( ) ARE IN MILLIMETERS

TEMPLATE NUMBER: 829749(B)

Date: 6-29-22