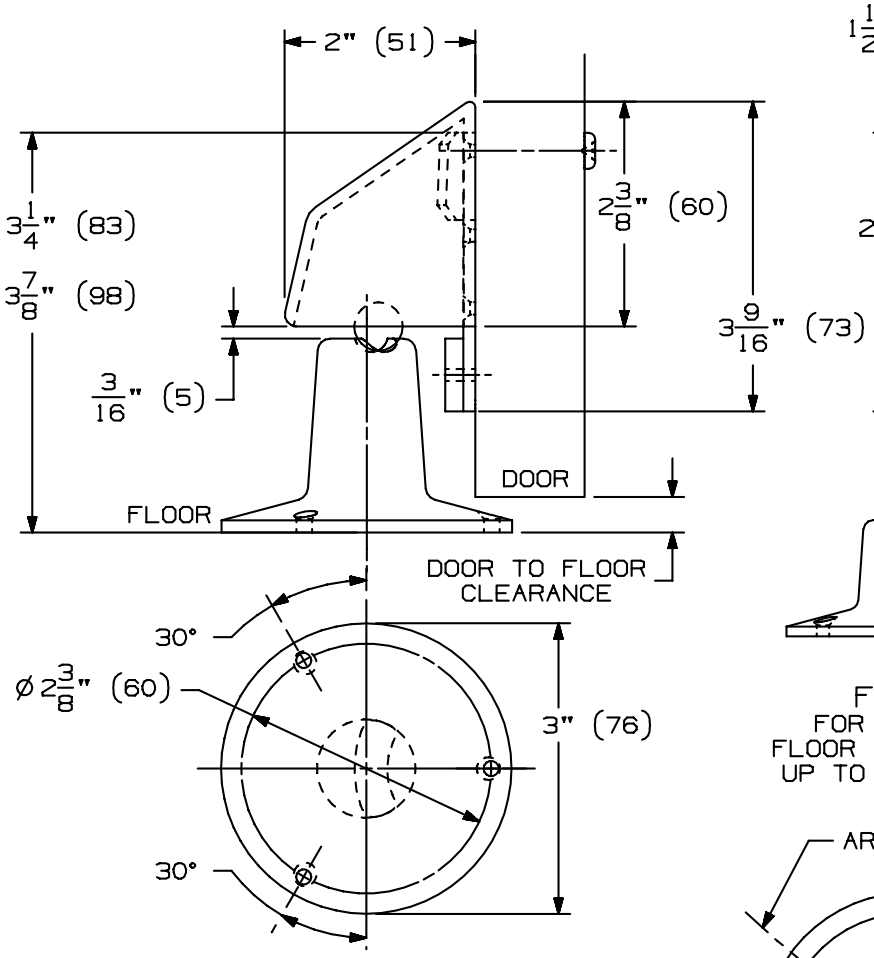

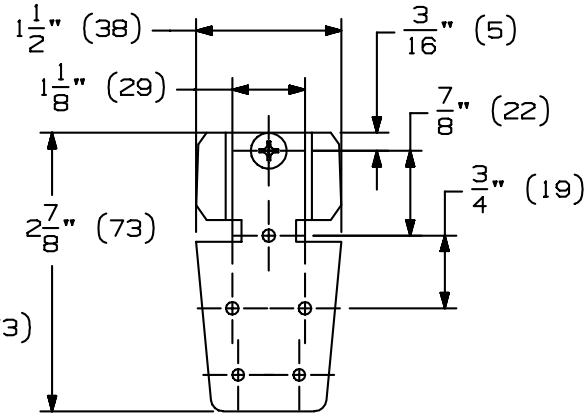

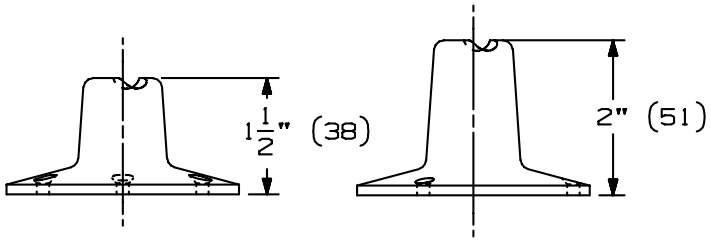

FS496
FOR DOOR TO FLOOR CLEARANCES UP TO 3/8" (10)

FS497
FOR DOOR TO FLOOR CLEARANCES UP TO 1" (25)

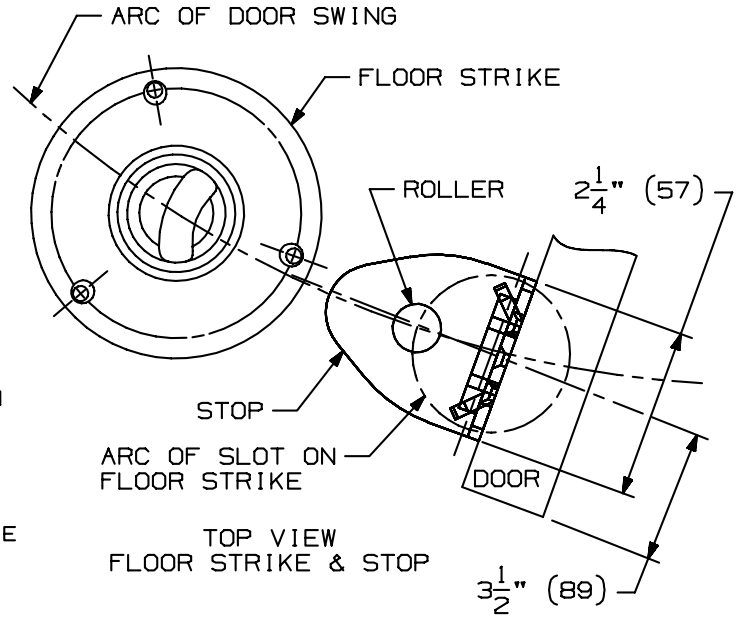

TOP VIEW
FLOOR STRIKE & STOP

INSTALLATION INSTRUCTIONS
FLOOR STRIKE APPLICATIONS

1. MOUNT BACKPLATE WITH CENTERLINE 3/4"(89) FROM LATCH EDGE OF DOOR. USE CHART TO DETERMINE DISTANCE FROM FLOOR TO TOP OF BACKPLATE, DEPENDING ON HEIGHT OF DOOR STRIKE YOU ARE USING.
2. PLACE STOP ASSEMBLY ON BACKPLATE AND PUSH IT DOWN ON TAPERED LEGS, WITH LOCKING SET SCREW FULLY RETRACTED. THEN RAISE STOP ASSEMBLY APPROX. 1/4"(6), TO PROVIDE ADJUSTMENT, AND LOCK INTO POSITION WITH LOCKING SET SCREW.
3. LOCATE DOOR IN HOLD OPEN POSITION AND PLACE STRIKE UNDER STOP ASSEMBLY WITH ROLLER FULLY ENGAGED IN SLOT. POSITION STRIKE IN REFERENCE TO DOOR AS SHOWN IN DIAGRAM. USE STRIKE AS TEMPLATE TO LOCATE SCREW HOLES.
4. MOUNT STRIKE.
5. ADJUST STOP ASSEMBLY N BACKPLATE TO 3/4"(5) CLEARANCE BETWEEN HOUSING AND STRIKE AS SHOWN IN ILLUSTRATION ABOVE. USE 3/16" DRILL AS SPACER. SECURE WITH LOCKING SET SCREW.
6. HOLDING POWER IS ADJUSTED BY TURNING ADJUSTNG SCREW COUNTERCLOCKWISE TO INCREASE TENSION AND CLOCKWISE TO DECREASE TENSION. FURTHER ADJUSTMENT CAN BE MADE BY MOVING STOP ASSEMBLY UP OR DOWN ON BACKPLATE.

	QTY	SCREW DETAILS
STRIKE	3	#12 X 1 1/4" OPHSMS
	3	#12 LEAD SHIELD
BACK PLATE WOOD DOORS	4	#8 X 1" FPHSMS
BACK PLATE METAL DOORS	4	8-32 X 1/2" FPHMS
BACK PLATE SEX BOLTS	4	SEX BOLT
	4	8-32 X 1/2" FPHMS

IVES

FS496 & FS497 AUTOMATIC FLOOR HOLDER INSTALLATION TEMPLATE

IR Security & Safety®

NOTE: DIMENSIONS IN () ARE MILLIMETERS.

TEMPLATE NUMBER: INST.FS496-497_0

DATE: 09-01-01